Interacting-Sprays Injection

From Liquid Rocket Engine to Diesel Engine

An Original Concept Proposed

By

Bruce Chehroudi, PhD

Advanced Technology Consultants
www.AdvTechConsultants.com

Interacting-Sprays Injection: An Innovative Fuel Injector Strategy

- Idea was originally proposed and named (as "Interacting Sprays Injection") by B. Chehroudi, PhD.
- Inspired by impinging jets injector design used in F-1 Rocket engine.

- Impinging jets offers an additional mechanism to standard aerodynamic breakup of the liquid core
  - Hence, no need to use very high injection pressures for atomization, because the impinging-jets process (if impingement point is optimized) assists the liquid core breakup.

- Initial impingement angle and injector holes separation values were guided by rocket applications and knowledge of intact core of full-cone diesel sprays.
- Injector design flexibility due to additional parameters that can be varied for optimum injection and mixture preparation.
- Proof-of-concept was demonstrated with two independent injectors (see original publication in the next slide). However, in application, what Chehroudi et al. had in mind was that a single injector unit to achieve the objectives in diesel engines (see some works that were published after Chehroudi's original research briefed in upcoming slides).
- Flexible features to produce not only "pilot and split injections," but additional injection strategies not possible with other approaches for emission reduction, performance, and efficiency improvements.
- The original work and first SAE publication by Chehroudi et al. predates all applications of interacting or impinging sprays in diesel engines.
- Applications of this injection system has been shown for early injection homogenous operation in diesel engines.
- A chapter is dedicated to "Interacting Sprays" by J. B. Greenberg in Handbook of Atomization and Sprays: Theory and Applications.

Background Information

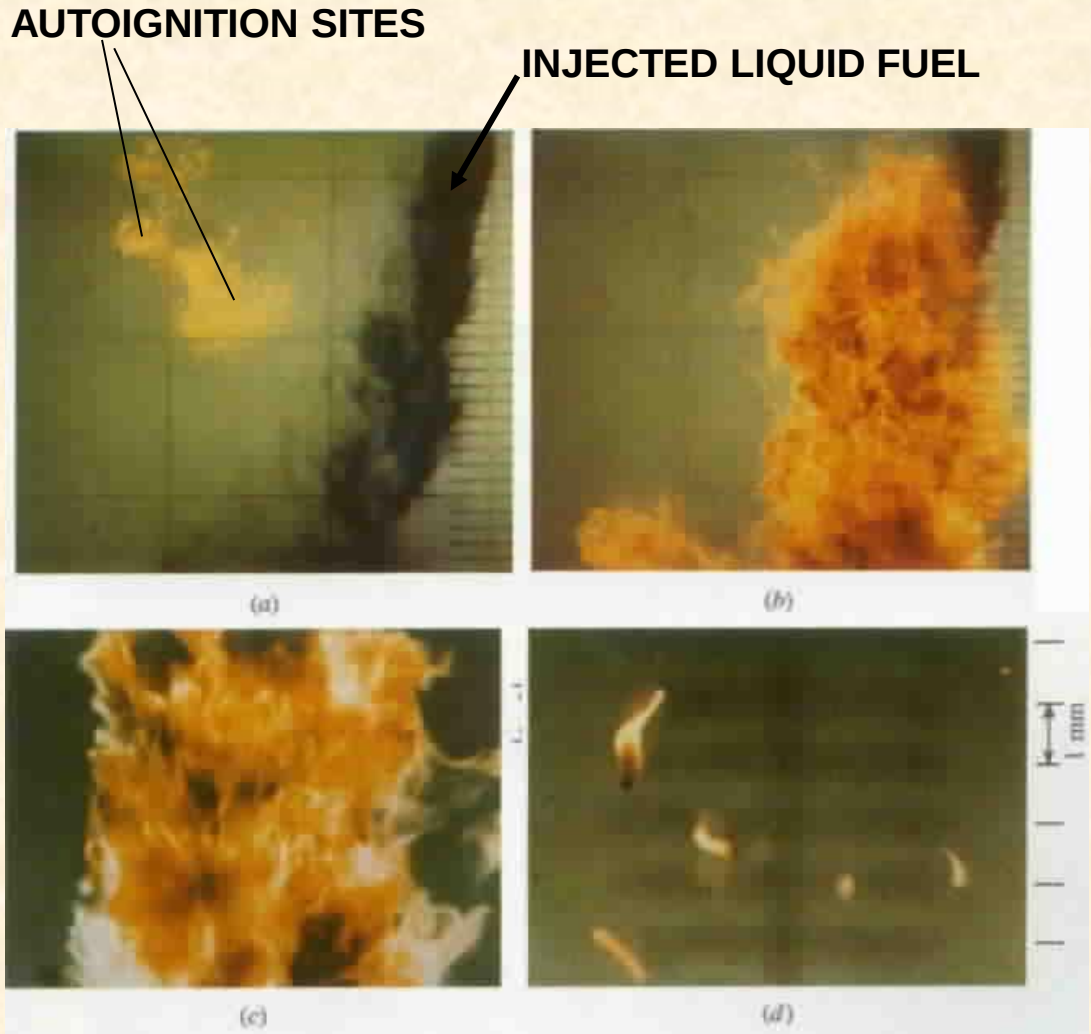

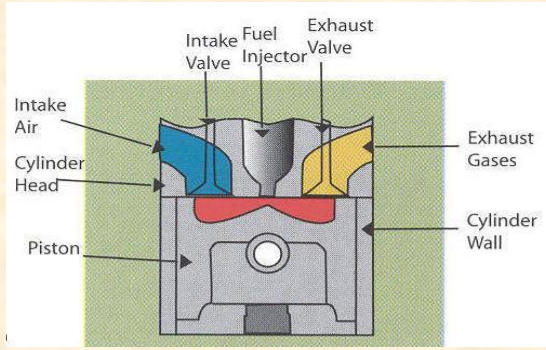

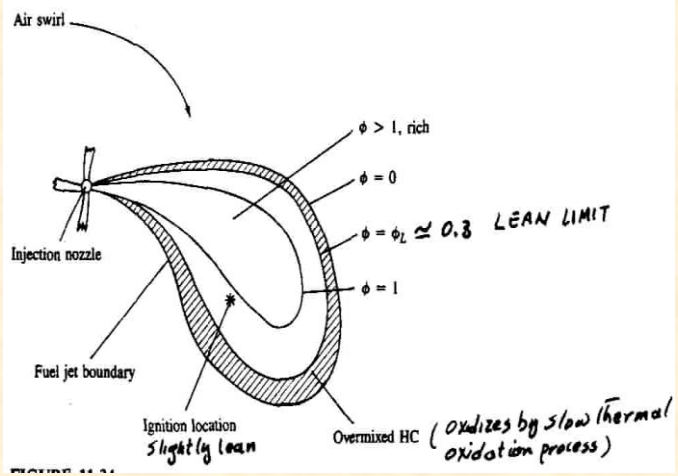

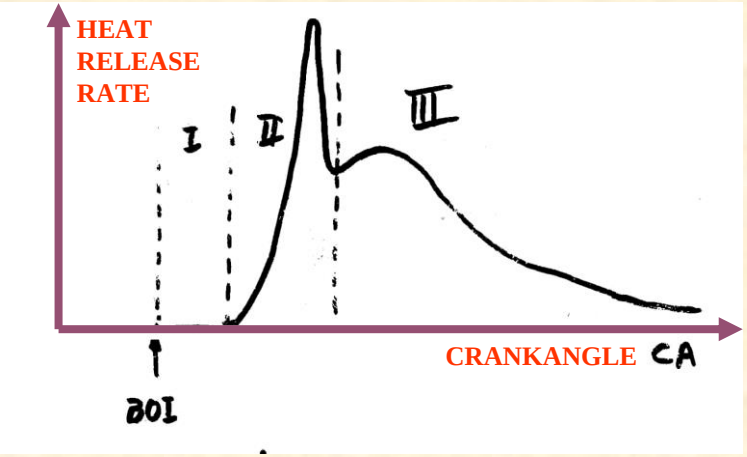

- Spray is convected in the air swirl direction
- A continuous spectrum of air/fuel ratios exist

I. Ignition delay period
II. Premixed combustion phase
III. Mixing-controlled combustion

Autoignition and combustion in diesel engine

Pilot / Split Injections

1. **Dual fuel applications**
2. **Reduces diesel knock**
3. **Improves cold startability and white smoke**

   - Osuka, I., Nislümura., M. Tanaka, Y., and Miyaki. M., SAE Paper 940586. 1994

4. **At sufficiently high pressure injection system and/or pilot or split injection has potential for simultaneous reduction of NOx, smoke and particulate with minimal effects on brake specific fuel consumption (bsfc).**

   - Oblanbder. K., Kollmann. K., Kramer. M., and Kutschera, I., SAE Paper 890438, 1989.
   - Sato. I., Yaniada. M., Kawagoe, M. and Fujimura. K., SAE Paper 891962. 1989.
   - Shimada. I., Shoji. I., Takeda. Y., SAE 891919, 1989.
   - Aoyama. T., Mizuta. J.. and Oshima. Y., SAE Paper 900637, 1990.
   - Shakal. J., and Martin J. K., SAE Paper 900398, 1990.
   - Shundoh. S., Kakegawa. T., Tusujirnura. K., Kobayashi. S., SAE Paper 910489, 1991.
   - Uvehara. O. SAE Paper 910732. 1991.
   - Shundoh. S.. Komori. M.. and Tsujimura. K., and Kobayashi, S., SAE Paper 920461, 1992.
   - Bower. C. R. and Foster, 0. F., SAE Paper 930864, 1993.
   - Tow T. C., Pierpont. D. A., and Reitz, R. D., SAE Paper 940897. 1994.
   - Durnholz, M., Endres. H., and Frisse, P., SAE Paper 940674, 1994.

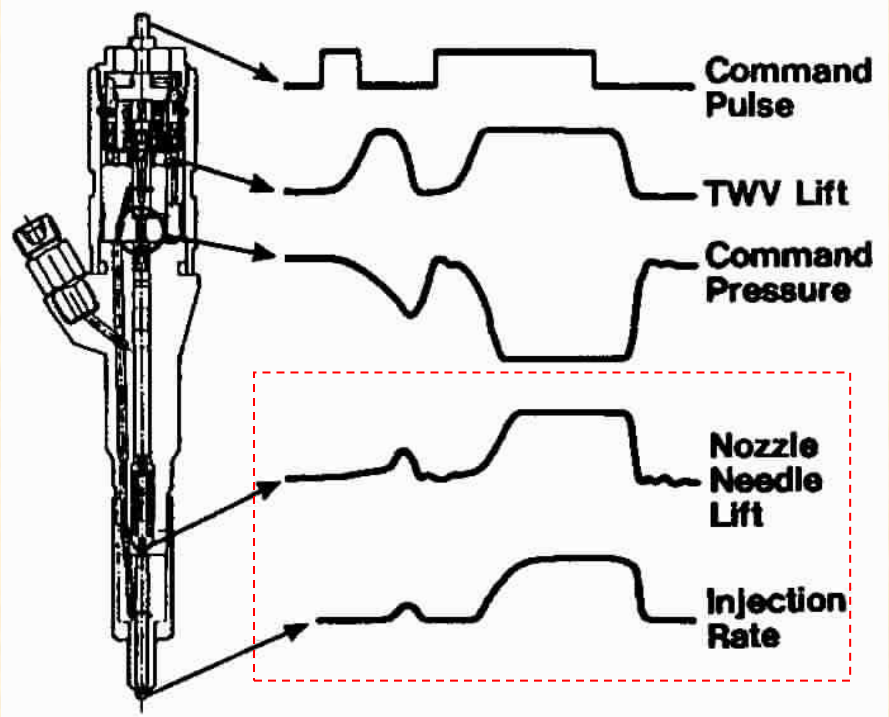

Item	Benefits
Combustion Noise Reduction	−4dB (Cylinder Pressure Level) (6)
	90 dBA ➡ 81 dBA (4)
NOx Reduction	Possibility to Reduce Certain Percent at Same BSFC (4)(5)(6)
Cold Startability	25 sec ➡ 8 sec at −15°C
White Smoke Reduction	63 sec ➡ 5 sec (Fade Away Time at −5°C)

Pilot/Split Injection vs Interacting-Sprays Injection

- Decrease in the amount of early burned charge in the premixed phase of the combustion decreases the exhaust NO_x.
- One way to achieve this is by pilot injection.
- But pilot injection by itself generally increases the smoke.
- To decrease smoke: use either split or multiple or very high pressure injection
- But, *Interacting-Sprays Injection* does all of that and much more

Stages of the Interacting-Sprays Injection Research Work

Optically-accessible single-cylinder D.I. diesel engine with impinging or "interacting" sprays.

Nature of interactions between sprays using Mie scattering.

Pusbka, D., Sinko, K., and Chehroudi, B., *Society of Automotive Engineers,* Paper 940679. 1994.
Sinko, K., Pushka, D., and Chehroudi. B., *Journal of Flow Visualization and Image Processing,* Vol. 2, pp. 93-1 12. 1995.

Vapor and liquid phase interactions by laser induced fluorescence (exciplex).

Campbell, P.H., Sinko, K. M., and Chehroudi B. The Combustion Institute. Central States Meeting. University of Wisconsin, Madison, Wisconsin, pp. 15-20, 1994.
Campbell, P. H., Sinko, K. M., and Chehroudi, B. *Society of Automotive Engineers,* Paper *950445.* 1995.
Chebroudi, B., Sinko, K., M., and Campbell, P. H. *Journal of Flow Visualization and Image Processing, 1996.*

Measure NOx and smoke in the exhaust: *Potential for simultaneous reduction.*

Sinko, K. M.. Shih, S., and Chehroudi, B. *Society of Automotive Engineers,* 1996 Congress and Exposition, Paper 960839, February 26-29, 1996.
Chehroudi, B., Sinko, K. M., and Shih, *S. Society of Automotive Engineers.* 1996 Future Transportation Technology Conference, Paper 961678, August *5-8,* 1996.
Chehroudi, B., Sinko, K. M., Minkowycz, W. J., and Shih, S., Atomization and Sprays, vol. 8, pp.673-690, 1998.

Interacting-Sprays Injection: Original Publication

This is the first publication in literature, describing application of Interacting-Sprays/Jets (or Impinging-Sprays/Jets) in a research diesel engine

A Novel Approach for Simultaneous NOx and Smoke Reduction: Interacting-Sprays Injection

SAE Paper 961678
1996-08-01

https://www.sae.org/publications/technical-papers/content/961678/

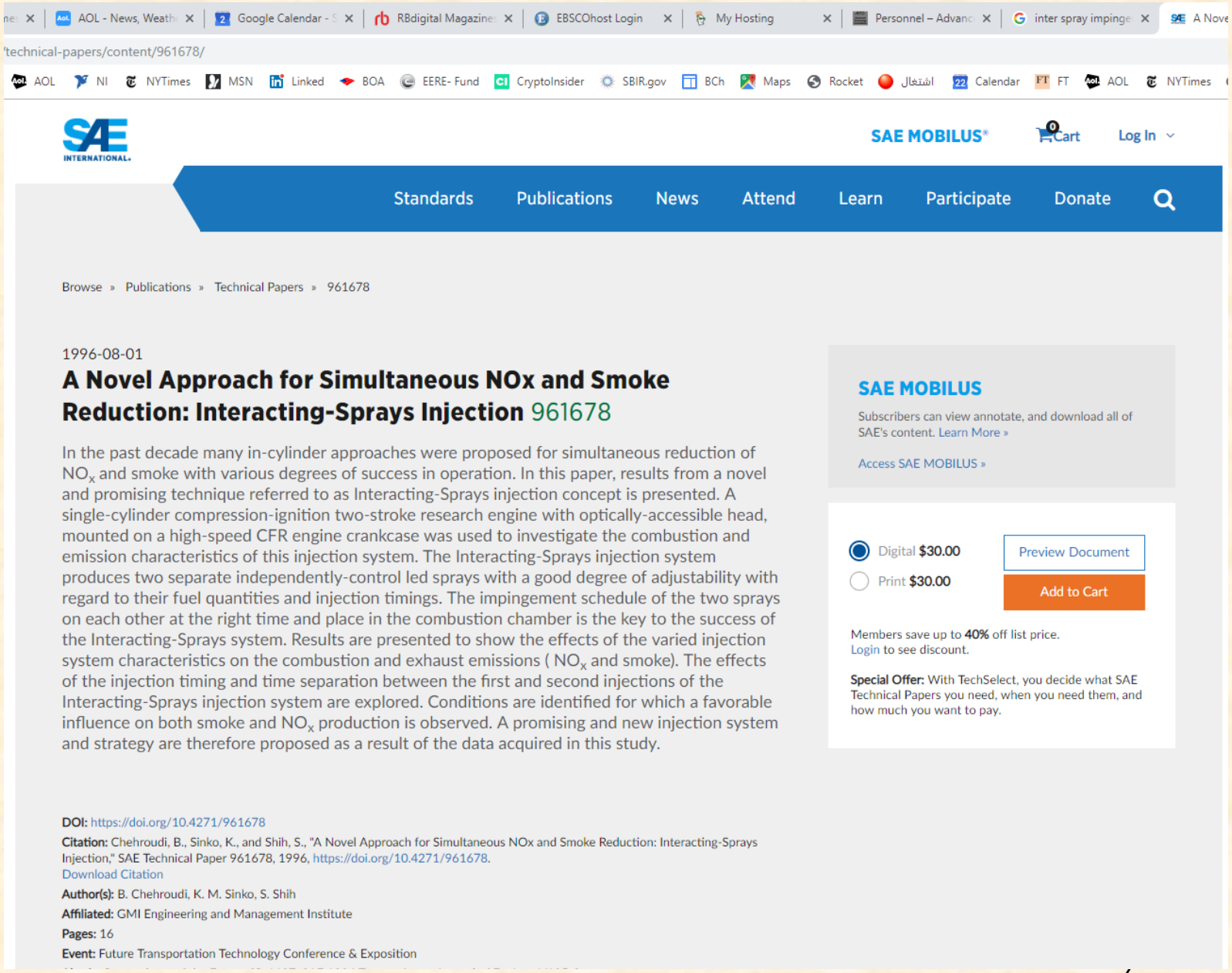

technical-papers/content/961678/

SAE INTERNATIONAL

SAE MOBILUS® Cart Log In

Standards Publications News Attend Learn Participate Donate

Browse » Publications » Technical Papers » 961678

1996-08-01

A Novel Approach for Simultaneous NOx and Smoke Reduction: Interacting-Sprays Injection 961678

In the past decade many in-cylinder approaches were proposed for simultaneous reduction of NO_x and smoke with various degrees of success in operation. In this paper, results from a novel and promising technique referred to as Interacting-Sprays injection concept is presented. A single-cylinder compression-ignition two-stroke research engine with optically-accessible head, mounted on a high-speed CFR engine crankcase was used to investigate the combustion and emission characteristics of this injection system. The Interacting-Sprays injection system produces two separate independently-control led sprays with a good degree of adjustability with regard to their fuel quantities and injection timings. The impingement schedule of the two sprays on each other at the right time and place in the combustion chamber is the key to the success of the Interacting-Sprays system. Results are presented to show the effects of the varied injection system characteristics on the combustion and exhaust emissions (NO_x and smoke). The effects of the injection timing and time separation between the first and second injections of the Interacting-Sprays injection system are explored. Conditions are identified for which a favorable influence on both smoke and NO_x production is observed. A promising and new injection system and strategy are therefore proposed as a result of the data acquired in this study.

SAE MOBILUS

Subscribers can view annotate, and download all of SAE's content. Learn More »

Access SAE MOBILUS »

Digital $30.00 Preview Document

Print $30.00 Add to Cart

Members save up to **40%** off list price.
Login to see discount.

Special Offer: With TechSelect, you decide what SAE Technical Papers you need, when you need them, and how much you want to pay.

DOI: https://doi.org/10.4271/961678

Citation: Chehroudi, B., Sinko, K., and Shih, S., "A Novel Approach for Simultaneous NOx and Smoke Reduction: Interacting-Sprays Injection," SAE Technical Paper 961678, 1996, https://doi.org/10.4271/961678.

Download Citation

Author(s): B. Chehroudi, K. M. Sinko, S. Shih

Affiliated: GMI Engineering and Management Institute

Pages: 16

Event: Future Transportation Technology Conference & Exposition

Interacting-Sprays Injection Strategy

Atomization and Sprays

vol. 8, pp.673-690, 1998

http://www.dl.begellhouse.com/journals/6a7c7e10642258cc,164dbee625df292a,3331d42554c87702.html

INTERACTING-SPRAYS INJECTION: A NEW CONCEPT FOR NO_X AND SMOKE REDUCTION IN DIESEL ENGINES

B. Chehroudi
Raytheon STX, Phillips Laboratory, OLAC PL/PKS, 10 E. Saturn Boulevard, Edwards A.F.B., California, USA

K. M. Sinko
GM Electro-Motive Division, LaGrange, Illinois, USA

W. J. Minkowycz
University of Illinois at Chicago, Chicago, Illinois, USA

S. Shih
Honda R&D, Raymond, Ohio, USA

In the past decade many in-cylinder injection approaches have been proposed for simultaneous reduction of NO_x and smoke in diesel engines, with various degrees of success in operation. In this article, some results from a novel and promising technique referred to as the interacting-sprays injection concept is presented. A single-cylinder compression-ignition two-stroke research engine with optically accessible head mounted on a high-speed CFR (cooperative fuel research) engine crankcase is used to investigate the combustion and emission characteristics of this injection system. The interacting-sprays injection system produces two separate, independently controlled liquid fuel spray injections with a good degree of adjustability with regard to their fuel quantities and injection timings. The impingement schedule of the two sprays on each other at the right time and place inside the combustion chamber is the key to the success of the interacting-sprays injection system. Results are presented that show the effects of the varied injection system characteristics on the combustion and exhaust emissions (NO_x and smoke). The effects of the injection timing and time separation between the first and second injections of the interacting-sprays injection system are explored. Conditions are identified for which a favorable influence on both smoke and NO_x production is observed. A promising and new injection system and strategy are therefore proposed as a result of the data acquired in this study.

Interacting-Sprays Injection: Engine Head Design

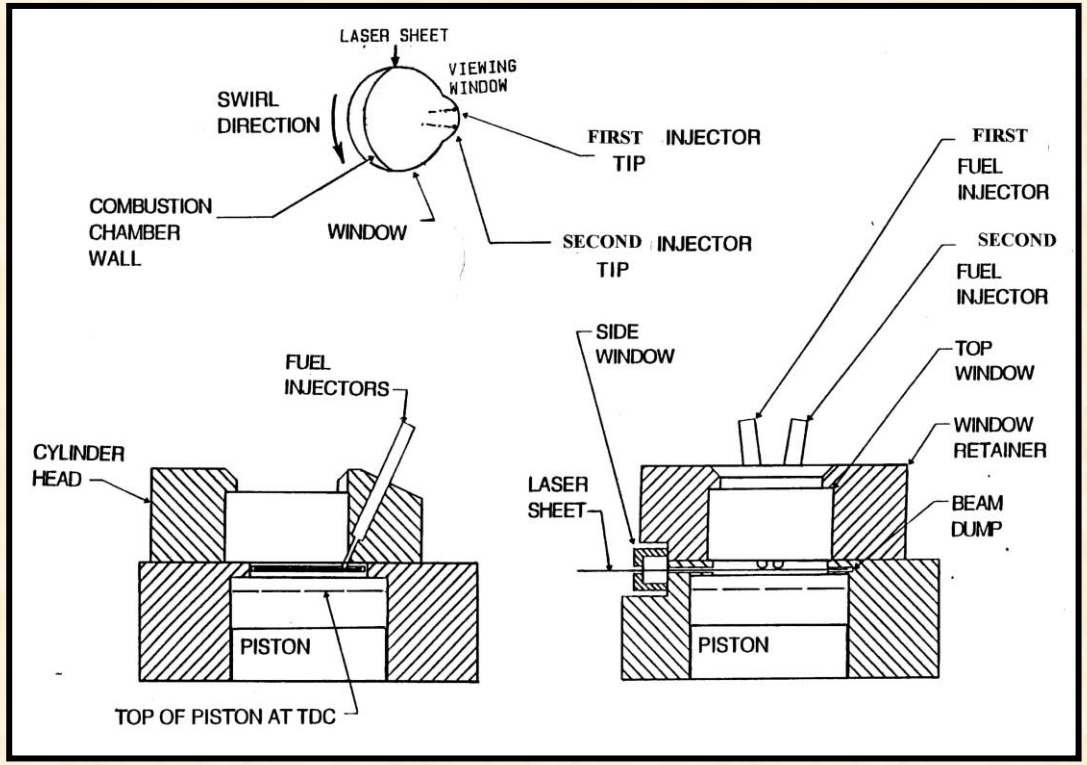

Engine head design for laser sheet entry into the combustion chamber for Exciplex flow visualization enabling simultaneous visualization of both the liquid and vapor phases.

Interacting-Sprays Injection: Engine Cylinder and Piston Design

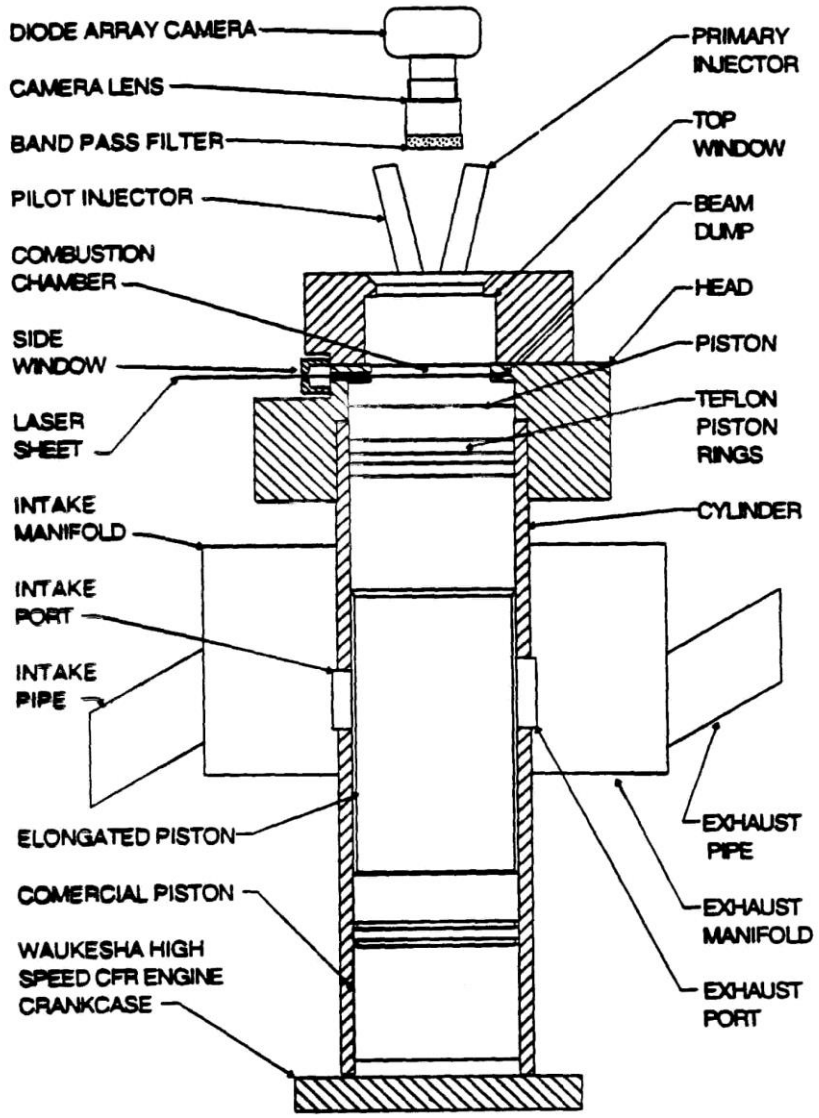

FIGURE 1
GENERAL ENGINE ARRANGEMENT

DETAILS OF THE ELONGATED CYLINDER-PISTON ASSEMBLY SHOWING THE POSITION OF THE WINDOWS

Visualization 2-Stroke Engine Design (1989)

B. Chehroudi's visualization engine at Princeton University, 1989

Interacting-Sprays Injection: Injector Information

Injection System Specification

- **Fuel Injector Nozzles:**
  - **Stanadyne slim-tip pencil nozzles**
  - **Single spray orifice drilled at 66 degrees to nozzle axis**
    - **First: One hole at 0.43mm (0.017in) dia.**
      L/D ratio: 1.53
    - **Second: One hole at 0.38mm (0.015in) dia.**
      L/D ratio: 1.73
  - **Measured spray impingement angle from images: 12 º to 14 º**
  - **Valve operating pressure: 20.8 MPa (2,800 psig)**
  - **Injection timing:**
    - **First: Continuously variable w.r.t. crankangle position**
    - **Second: Continuously variable w.r.t. crankangle position**
  - **Fuel pumps; Ambac APE**
  - **Cam profiles: Ambac # 1 basic metric**
  - **Fuel pump plunger diameter:**
    - **First: 8.0mm**
    - **Second: 5.0mm**
  - **Fuel pump delivery valve retraction volumes:**
    - **First: 50 mm^3**
    - **Second: 50 mm^3**
  - **Injection line:**
    - **Internal diameter: 2mm (0.079in)**
    - **Length:**

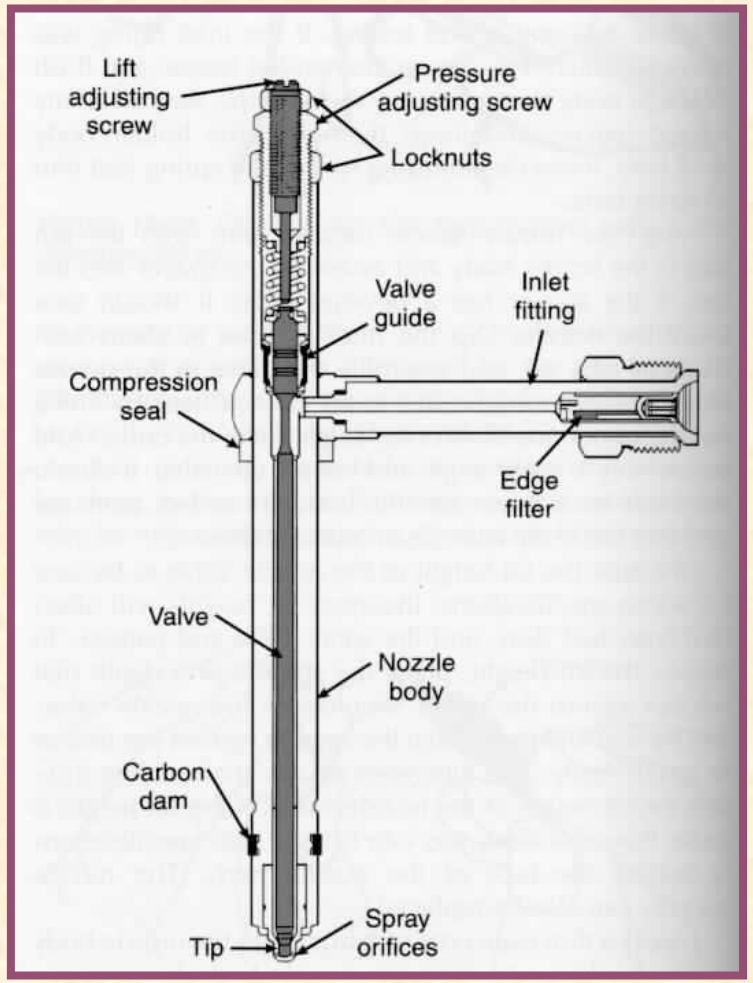

Components of a pencil nozzle (Stanadyne Diesel Systems)

Interacting-Sprays Injection: Injectors Used

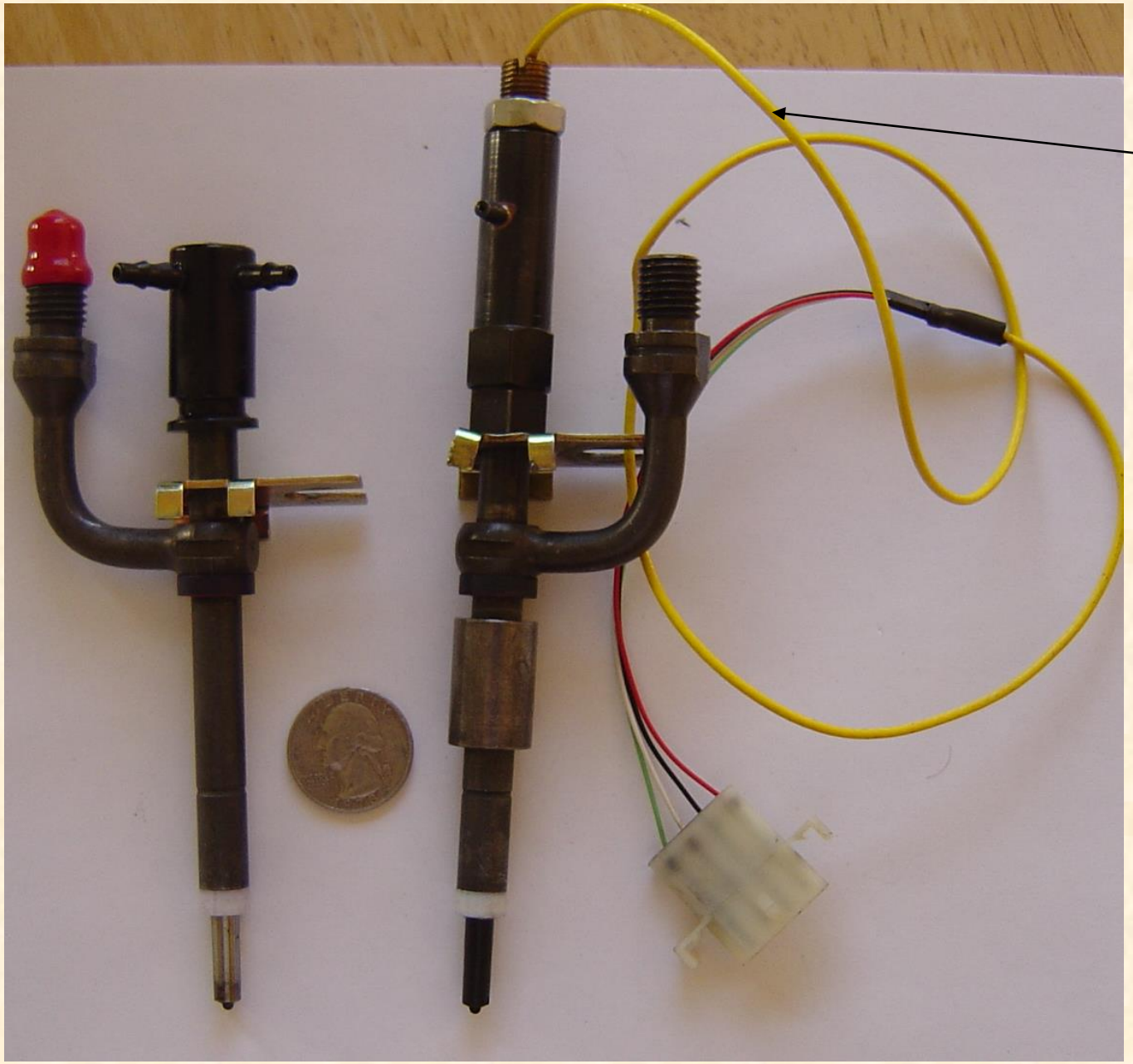

Hall Effect Sensors

Interacting-Sprays Injection: Test Setup

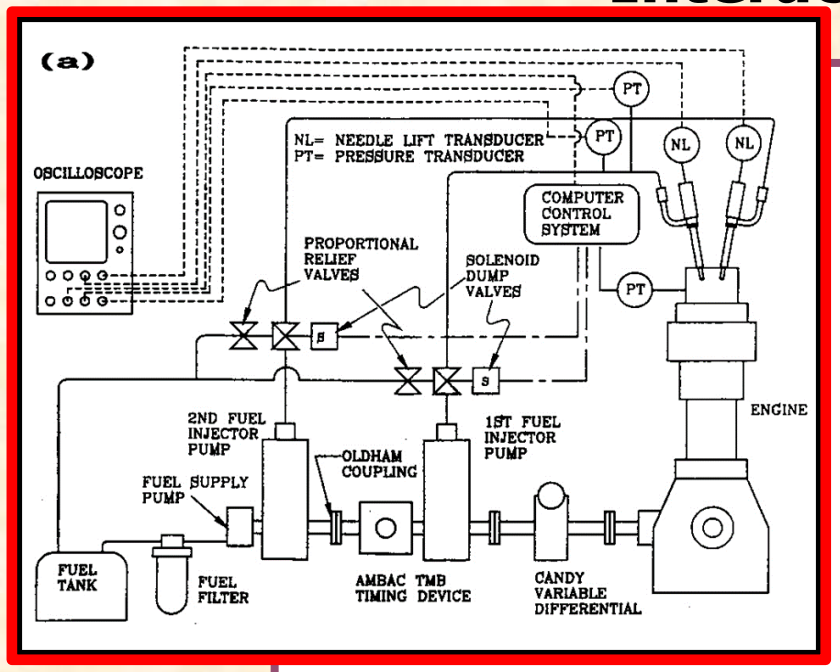

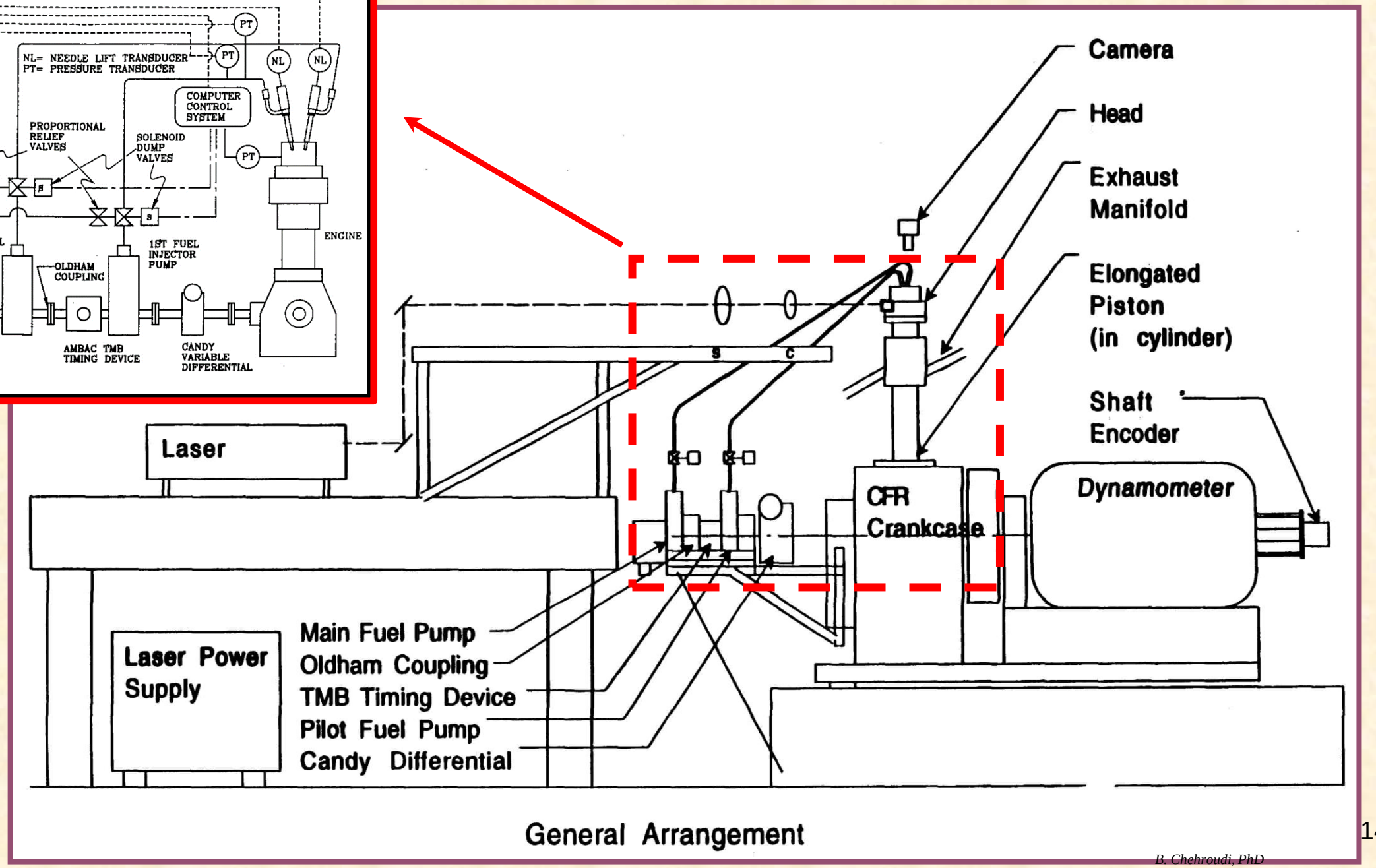

Interacting-Sprays Injection: Intake System for Exciplex Visualization

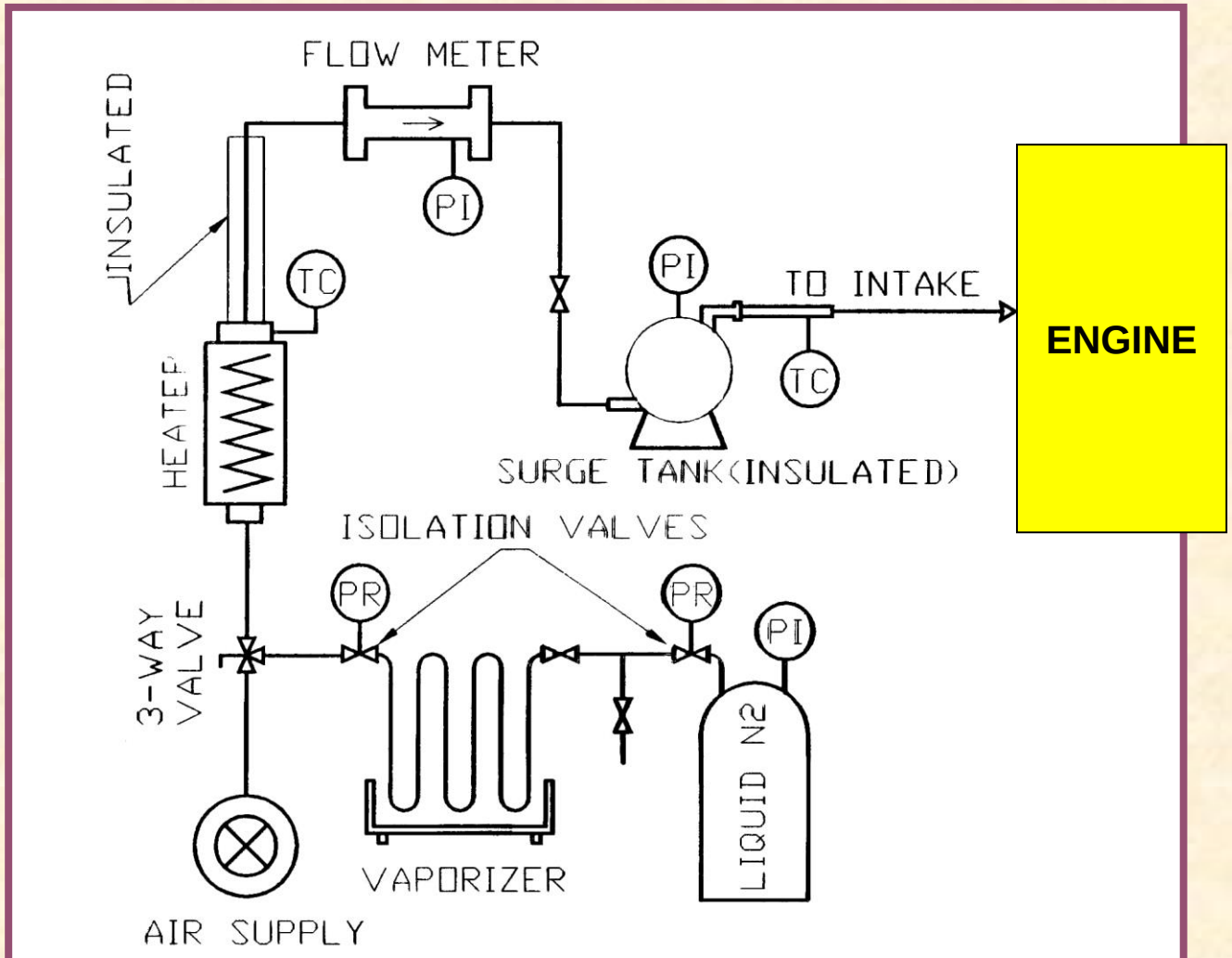

FIGURE 4. Schematic of the nitrogen/air intake system.

ENGINE

SETUP FOR LASER INDUCED FLUORESCENCE (EXCIPLEX) MEASUREMENTS USING NITROGEN INSTEAD OF THE AIR

B. Chehroudi, PhD

Interacting-Sprays Injection: Emission Measurements

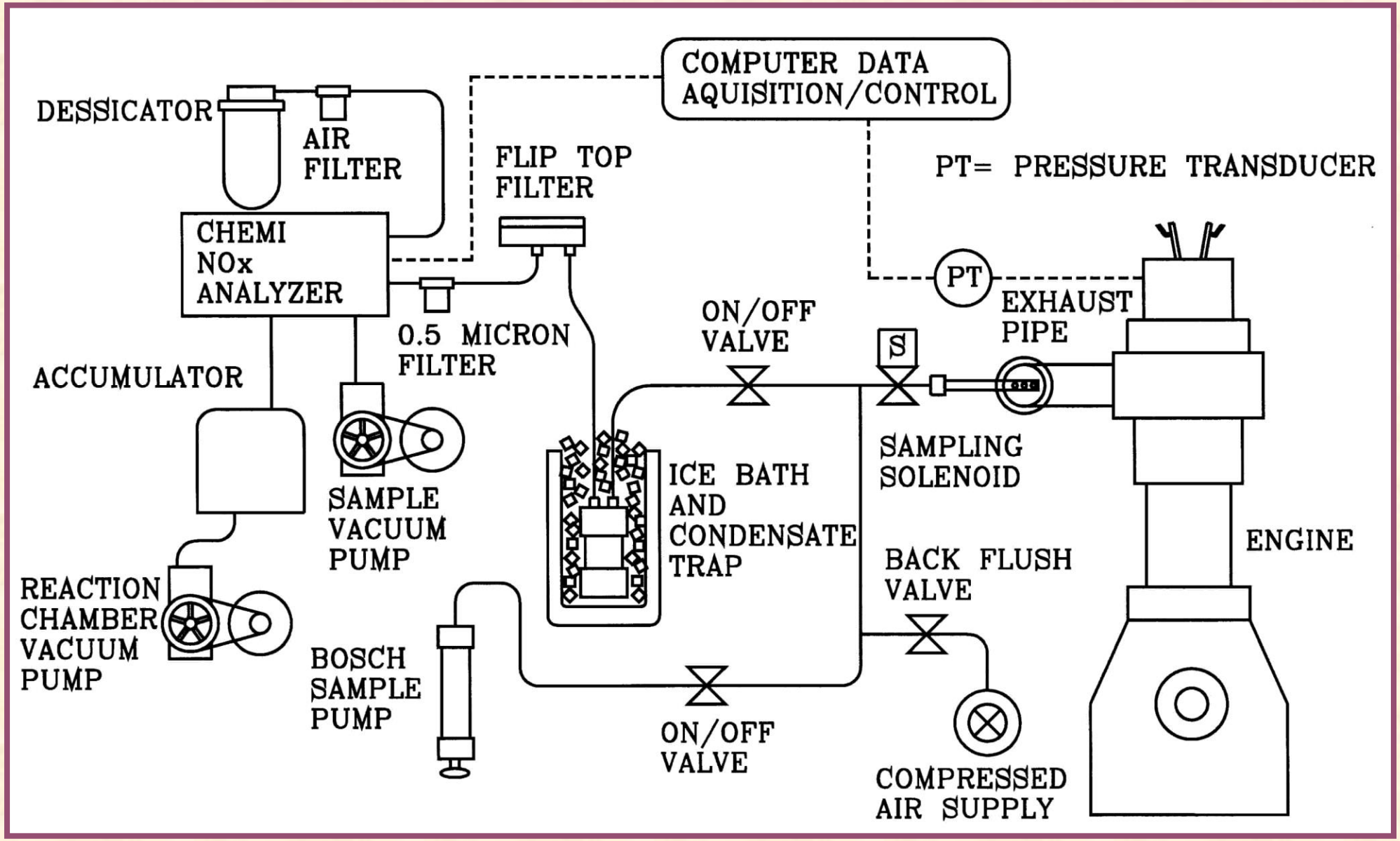

ENGINE EMISSION MEASUREMENT SETUP

Interacting-Sprays Injection: Liquid Phase Only

Liquid Phase only

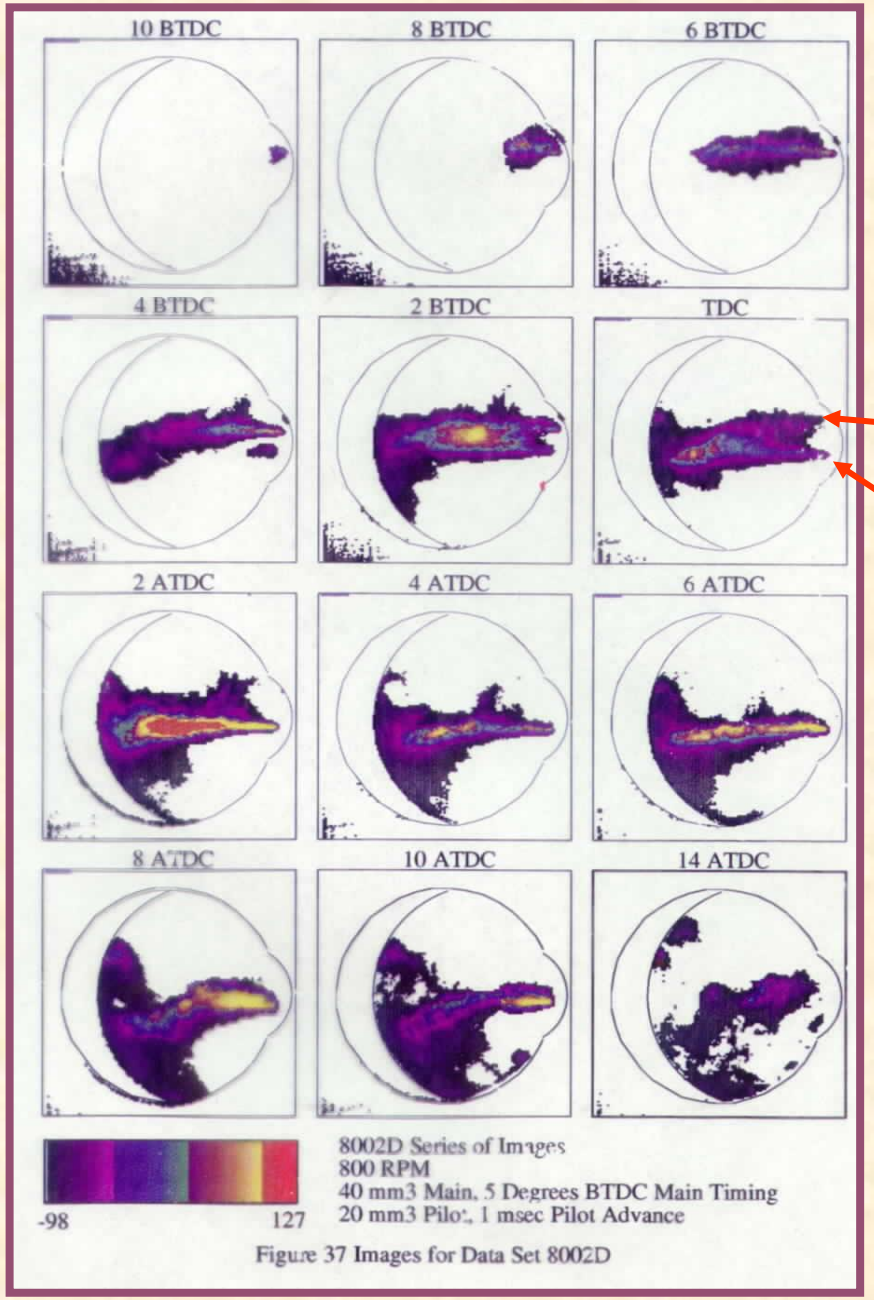

ATDC: AFTER TOP DEAD CENTER (TDC)

BTDC: BEFORE TOP DEAD CENTER (TDC)

FIRST INJECTOR

SECOND INJECTOR

Figure shows injection of two jets from the two injectors. The second injection begins at about 4° BTDC. The spray cores impinge at about 2° BTDC. After about 2° ATDC, only the second injector continues injection into the combustion chamber.

Interacting-Sprays Injection System: Exciplex Study
Simultaneous Liquid & Gas Phases Visualization

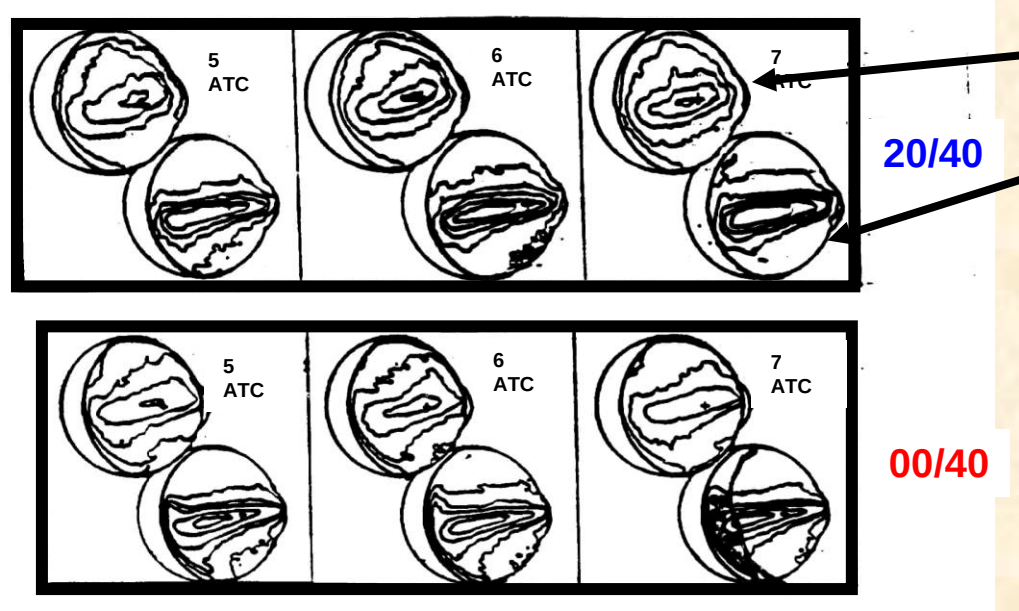

GASEOUS PHASE

LIQUID PHASE

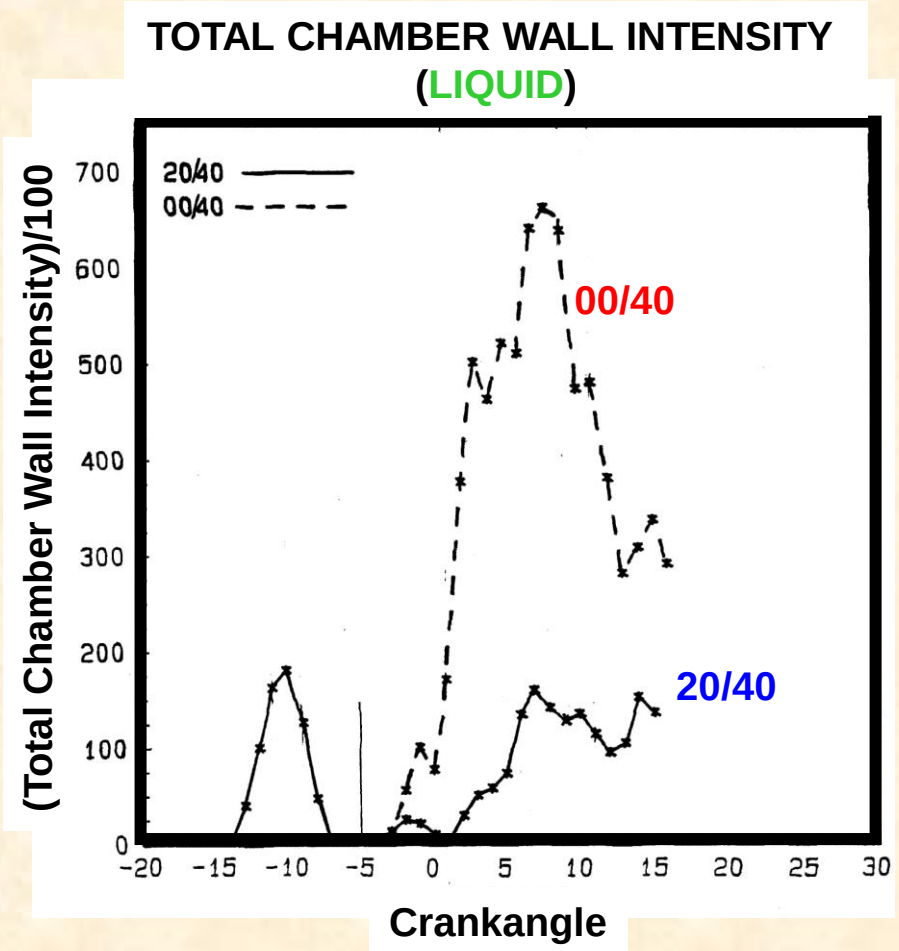

- 20/40: 1st injector 20 and 2nd injector 40 mm3/injection
- 00/40: 1st injector “0” and 2nd injector 40 mm3/injection

- The 20/40 case shows less liquid fuel accumulation near the walls than the 00/40 case:
  - Implies lower HC emissions

Injection Strategies for Combustion and Emissions Studies

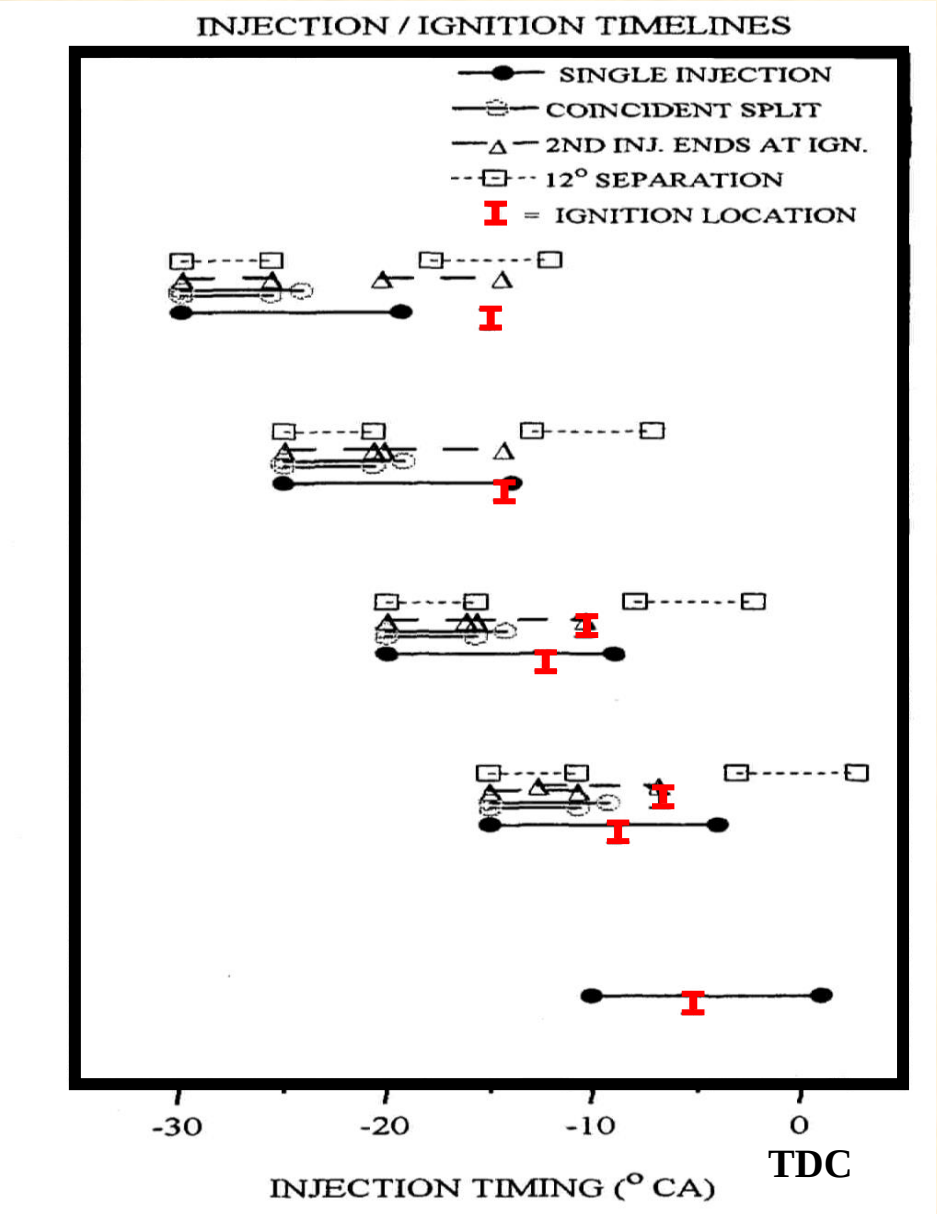

Injection strategies tested under interacting-sprays injection system

Interacting-Sprays Injection: NOx vs. Smoke Tradeoff

The NOx-Smoke trade-off curves for the four injection strategies shown. BOI stands for the beginning of the injection.

Measurement uncertainty:
NOx = +/- 1.8% of the reported data.
BSN= +/- 3.45% of the reported data.

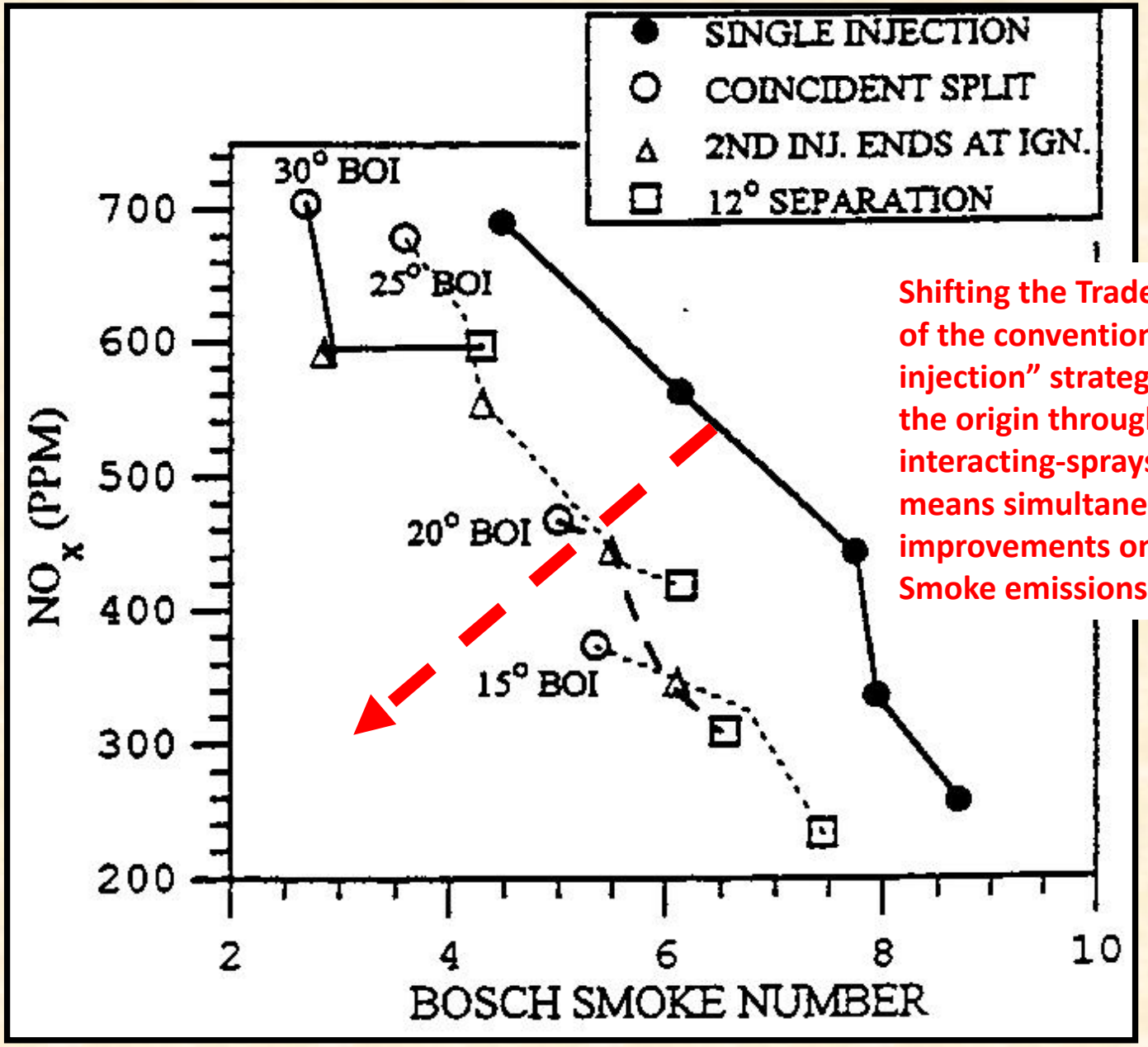

Shifting the Tradeoff Curve of the conventional "single-injection" strategy towards the origin through the interacting-sprays injection means simultaneous improvements on NOx and Smoke emissions.

Interacting-Sprays Injection

Results for all the interacting-sprays and single-injection strategies plotted as functions of crank angle degrees. For horizontal axis, zero and negative numbers are at TDC and before TDC (i.e., BTDC), respectively.

Injection scheduling:

- **(a) single injection**
- **(b) coincident split**
- **(c) second injection ends at ignition**
- **(d) 12° separation**

Measurement uncertainty:
NOx = +/- 1.8% of the reported data.
BSN= +/- 3.45% of the reported data.

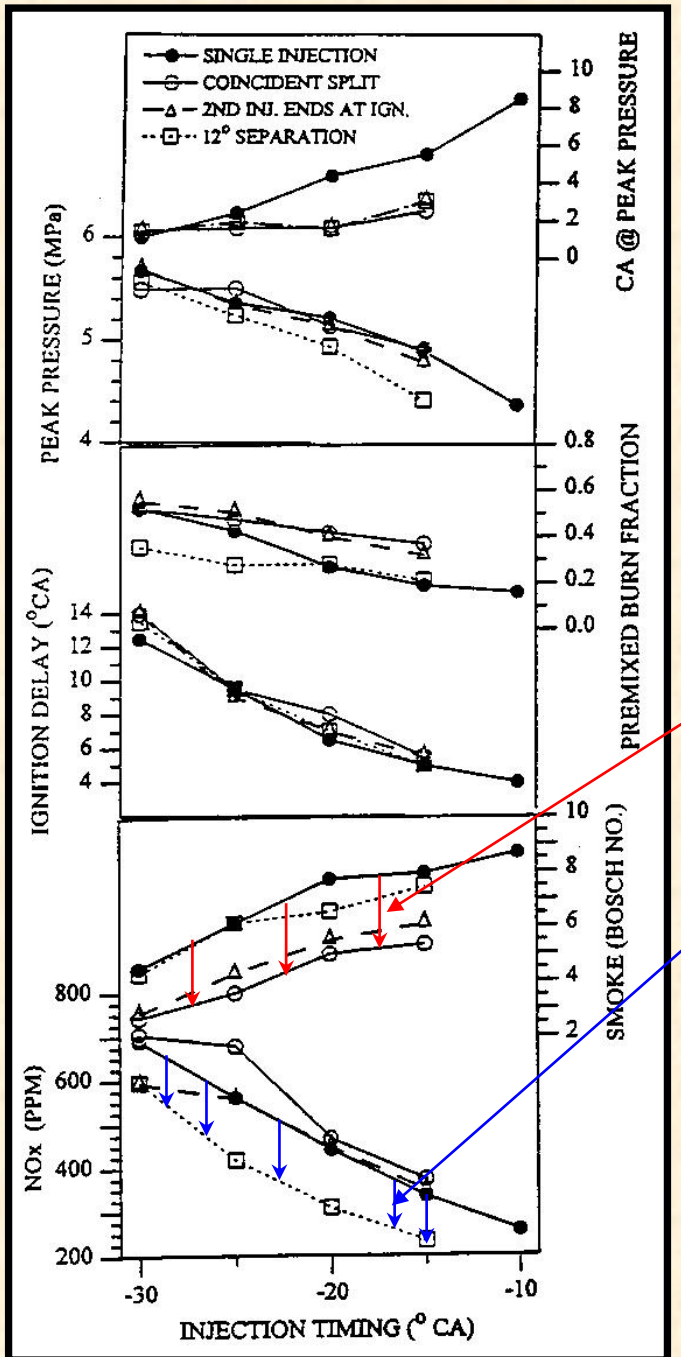

With respect to *Conventional Single Injection* fuel injection strategy:

- **Simultaneous injection leads to reduction in smoke**
- **Injection with time separation leads to reduction in NOx**
- **Therefore, strategies can be envisioned for simultaneous reduction in smoke and NOx.**

INTERACTING-SPRAYS INJECTION SYSTEM: Work by Others

Research work reported by others following the research conducted by Chehroudi et al.

Chehroudi's work predates all such applications in diesel engines

952511

Characteristics of Diesel Combustion and Emissions with a Multi-Injector System

Yoshinaka Takeda and Keiichi Niimura
New ACE Institute Co., Ltd.

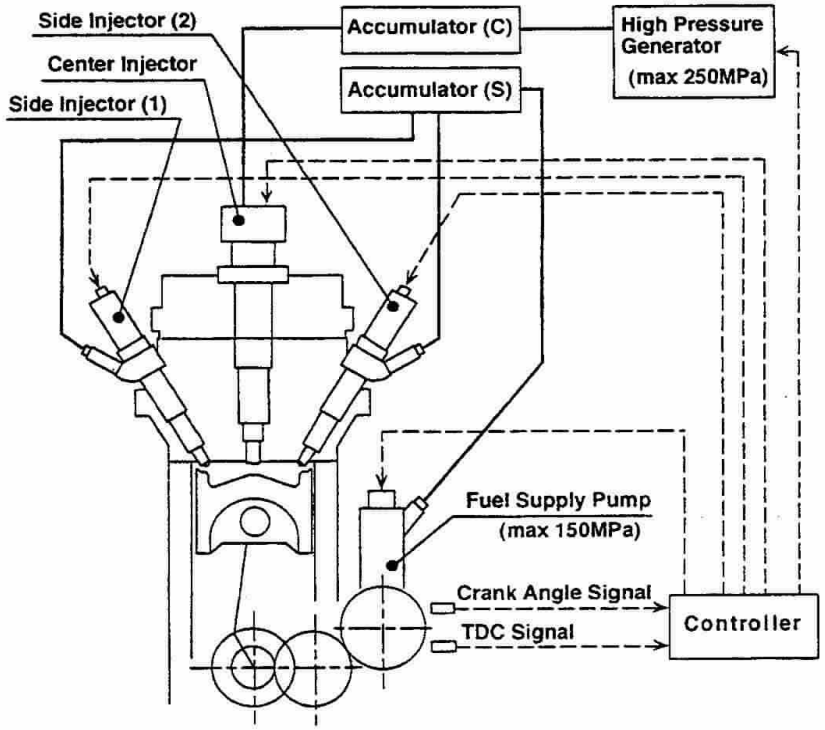

Figure 1 : Schematic diagram of the multi-injector system used in this study

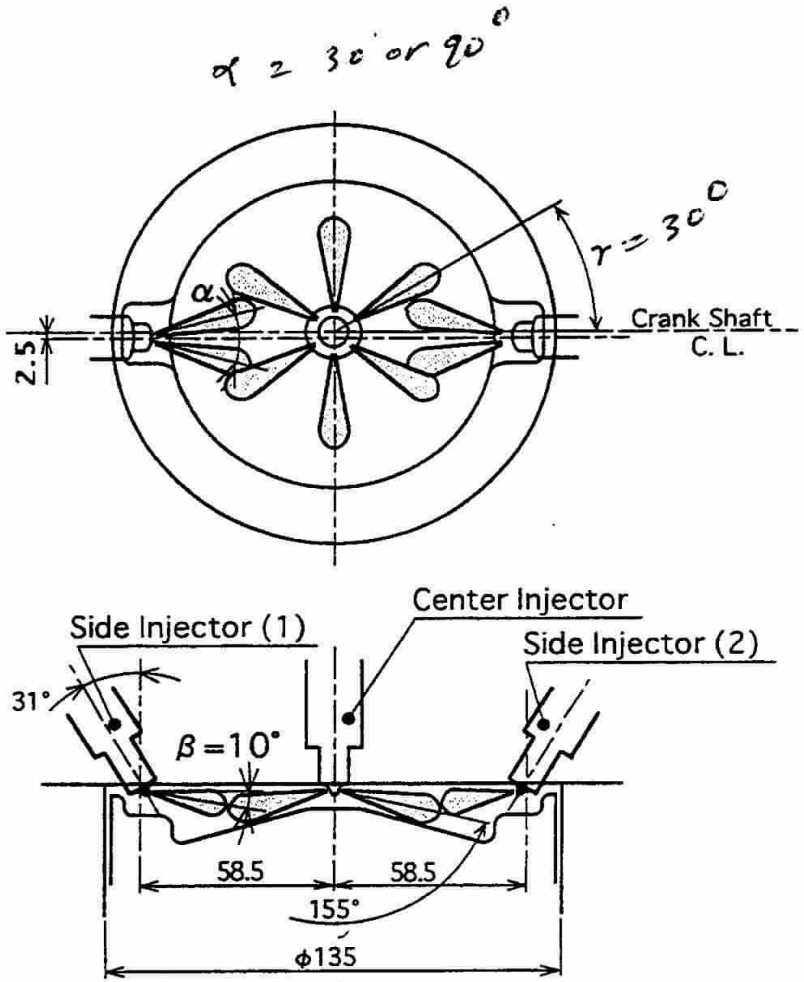

Figure 2 : Schematic of the spray arrangement for the center and side injectors

INTERACTING-SPRAYS INJECTION SYSTEM: Work by Others

Research work reported by others following the research conducted by Chehroudi et al.

Chehroudi's work predates all such applications in diesel engines

970898

Combustion and Emission Characteristics of Premixed Lean Diesel Combustion Engine

Keiichi Nakagome, Naoki Shimazaki, and Keiichi Niimura
New ACE Institute Co., Ltd.

Shinji Kobayashi
Japan Automobile Research Institute, Inc.

1999-01-0183

Approaches to Solve Problems of the Premixed Lean Diesel Combustion

Hisashi Akagawa, Takeshi Miyamoto, Akira Harada, Satoru Sasaki, Naoki Shimazaki, Takeshi Hashizume and Kinji Tsujimura
New ACE Institute Co., Ltd.

ILASS/ICLASS CONFERENCE, PASADENA, CALIFORNIA, 2000

Inter-spray Impingement of Two Diesel Sprays

Takayuki CHIBA*, Masahiro SAITO, Kenji AMAGAI and Masataka ARAI
Dept. of Mechanical System Engineering, School of Engineering,
Gunma University, 1-5-1 Tenjin-cho Kiryu 376-8515, Japan
e-mail, arai@me.gunma-u.ac.jp, Fax: +81-277-30-1521

INTERACTING-SPRAYS INJECTION SYSTEM: Work by Others

Research work reported by others following the research conducted by Chehroudi et al.

Chehroudi's work predates all such applications in diesel engines

ILASS/ICLASS CONFERENCE, PASADENA, CALIFORNIA, 2000

Inter-spray Impingement of Two Diesel Sprays

Takayuki CHIBA*, Masahiro SAITO, Kenji AMAGAI and Masataka ARAI
Dept. of Mechanical System Engineering, School of Engineering,
Gunma University, 1-5-1 Tenjin-cho Kiryu 376-8515, Japan
e-mail, arai@me.gunma-u.ac.jp, Fax: +81-277-30-1521

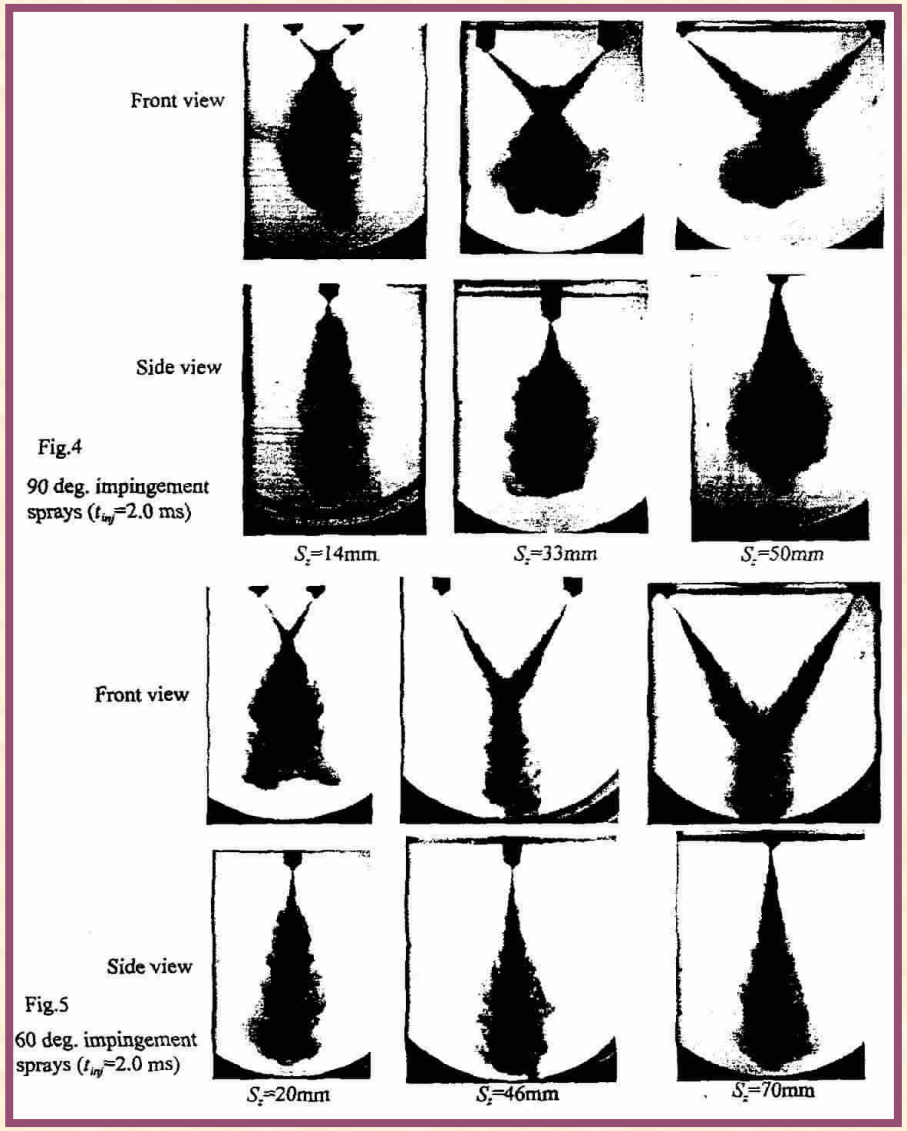

INTERACTING-SPRAYS INJECTION SYSTEM: Communication with Prof. M. Arai

AOL Desktop 9.7 - Connected, Signed-On - [Re: Impinging jets/sprays for diesel engines]

Reminder: AOL will never ask you for your password or billing information.

Subject: Re: Impinging jets/sprays for diesel engines...
Date: 11/5/2014 6:30:41 A.M. Pacific Daylight Time
From: arai@gunma-u.ac.jp
To: ChehroudiB@aol.com
Sent from the Internet (Details)

Dear Dr. Bruce Chehroudi

Thank you having interest on my review and informing your first attempt of spray interacting research. I am now considering the revised version of that review and I want to introduce your work in the new context in future.
Again, thank you

Nov. 5, 2014
Masataka Arai

(2014/11/02 8:04), ChehroudiB@aol.com wrote:

Dear *Prof. Arai:*

I recently read your excellent review article on Physics Behind Diesel Sprays (my sincere congratulations for this review) and saw your reference to impinging sprays in the context of the diesel sprays.

However, I wanted to bring to you attention that my group was the "FIRST TIME" ever attempted to use the concept of interacting or impinging sprays in diesel engines. All other works published on impinging sprays came after our work. Our first publication was on 1994 (see references of the attached paper) and the work on my idea started on 1991. In fact, you will see an extended coverage of this work in the Handbook of Atomization and Sprays in Chapter 22 under the title of 'Interacting Sprays" by Prof. J. B. Greenberg published in 2011.

Please find attached a copy of the SAE paper for your attention.

Sincerely

Bruce Chehroudi, PhD
Advanced Technology
Consultantswww.AdvTechConsultants.com
ChehroudiB@aol.com

4 Hidden Crest Way, Laguna Niguel, CA 92677, Tel (949) 467-9233, USA;

2000 Southwood Drive, Nashua, NH, (805) 559-8353, USA

Corso Elvezia 31, Lugano, Switzerland, 6900, +41(0) 41 77 459 74 02

Dr. Chehroudi, has accumulated over twenty five years of technical and leadership experiences in different capacities and organizations. This includes such positions as a Principal Scientist and Group Leader appointment at the Air Force Research Laboratory (AFRL) ERCInc, a Chief Scientist at Raytheon STX, a Visiting Technologist at Ford's Advanced Manufacturing Technology Development (AMTD) center, a tenured Professor of Mechanical Engineering at Kettering University and University of Illinois, and served as a Senior Research Staff/Research Fellowship at Princeton University. Dr. Chehroudi directed numerous multimillion dollar interdisciplinary projects in areas involving chemically reacting flows, combustion and emission of pollutants, sustainable and alternative energy sources, distributed ignition, material/fuel injection, advanced pollution reduction technologies, propulsion concepts, gas turbine and liquid rocket engines, combustion instability, laser optical diagnostics, spectroscopy, supercritical fluids and applications in environmental and propulsion systems, advanced composites, MEMS, nanotechnology, and micro fluidics. He has won many merit and leadership awards by such prestigious organizations as the Society of Automotive Engineers (1. *Arch. T. Colwell Merit Award* for technical excellence only to top 1% yearly, 2. *Ralph R. Teetor Award* for outstanding teaching/research/leadership, 3. *Forest R. McFarland Award* for sustained leadership in professional and educational service, and 4. *Outstanding Faculty Advisor*), American Institute of Aeronautics and Astronautics (*Best Publication Award of the Year*), Air Force Research Laboratories (1. *Outstanding Technical Publication Award* and 2. *STAR Team Award* for demonstrating world-class combined scientific and leadership achievements), Institute of Liquid Atomization and Sprays Systems (*Marshall Award* for best publication with lasting contributions),
Liquid Propulsion Sub-committee of Joint Army-Navy-NASA-Air Force (JANNAF) (Best Liquid Propulsion Paper Award involving undergraduate/graduate students), and the 2nd International Symposium on Turbulence and Shear Flow Phenomena (Top 10 Technical Publication Award). He has been a consultant with many organizations such as, Ford, GM, Honda R&D, AFRL, Honeywell, NASA, AFOSR, VW, Bosch, Siemens, NGK, Cummins, and TRW. Through professional societies, Dr. Chehroudi delivers invited professional seminars on Management of R&D Teams and Organizations, Management of Innovation, Combustion and Emission of Pollutants in Automotive and Gas Turbine Engines, Ignition Issues, Gasoline Direct Injection engines, R&D on Homogeneously-Charged Compression Ignition (HCCI) engines, and Liquid Injection Technologies. He has a PhD in Mechanical & Aerospace Engineering and Post-Doctoral Fellow (Princeton University), MS in Mechanical Engineering (Southern Methodist University, Summa Cum Laude), MS in Economics (Swiss Finance Institute, Magna Cum Laude), a senior member of American Institute of Aeronautics and Astronautics Propellant & Combustion Committee (2008-present), and is an Associate Fellow of American Institute of Aeronautics and Astronautics.
Dr. Chehroudi acts as a reviewer for many scientific and engineering journals and publishers, has delivered over 200 presentations in technical meetings and to nontechnical audiences, over 20 technical reports (Princeton University, General Motors, Ford Motor Co, Department of Energy, NASA, Air Force Research Laboratory), five 600-plus-page monographs on combustion and emission of pollutants from mobile power plants, ignition technologies, liquid material injection, and nanotechnology, two book chapters on propulsion system combustion instability and applications of graphene (a nanotech product) in ignition and combustion of fuels, ground-breaking patents on applications and synergy between nanotechnology, light, and chemical reaction for a light-activated distributed ignition of fuel-air mixtures, and has more than 150 publications with extensive experience in both scientific and management areas and intensive trainings in finance and financial engineering.

Masataka ARAI
E-mail from Aioi Office

Dr. Eng. Masataka ARAI
Specially-Appointed Professor
Department of Mechanical Engineering
Graduate School of Engineering, TOKYO DENKI University
5 Senju-Asahi-cho Adachi-ku Tokyo, 120-8551 Japan
Tel/Fax 81-3-5284-5499
E-mail: marai@mail.dendai.ac.jp
Emeritus Professor of Gunma Univ., Japan
E-mail: arai@gunma-u.ac.jp

新 井 雅 隆
特別専任教授
東京電機大学工学研究科機械工学専攻
〒120-8551 東京都足立区千住旭町５番

自宅(Home Office)
Masataka ARAI
2-608-7 Aioi-cho Kiryu Gunma, 376-0011 Japan
新井 雅隆
〒376-0011 群馬県桐生市相生町２丁目608-7
Tel/Fax 81-277-54-8428
E-mail: arai@gunma-u.ac.jp （当分の間，連絡可能です）

Research work reported by others following the research conducted by Chehroudi et al.

Chehroudi's work predates all such applications in diesel engines

ILASS/ICLASS CONFERENCE, PASADENA, CALIFORNIA, 2000

Inter-spray Impingement of Two Diesel Sprays

Takayuki CHIBA*, Masahiro SAITO, Kenji AMAGAI and Masataka ARAI
Dept. of Mechanical System Engineering, School of Engineering,
Gunma University, 1-5-1 Tenjin-cho Kiryu 376-8515, Japan
e-mail, arai@me.gunma-u.ac.jp, Fax: +81-277-30-1521

Communication with Prof. Masataka Arai, reminding that Chehroudi's research work on Interacting-sprays (or impinging sprays) injection was the first application of such concept in a research diesel engine.

Acknowledgement of this fact by Prof. Arai can be seen in his response.

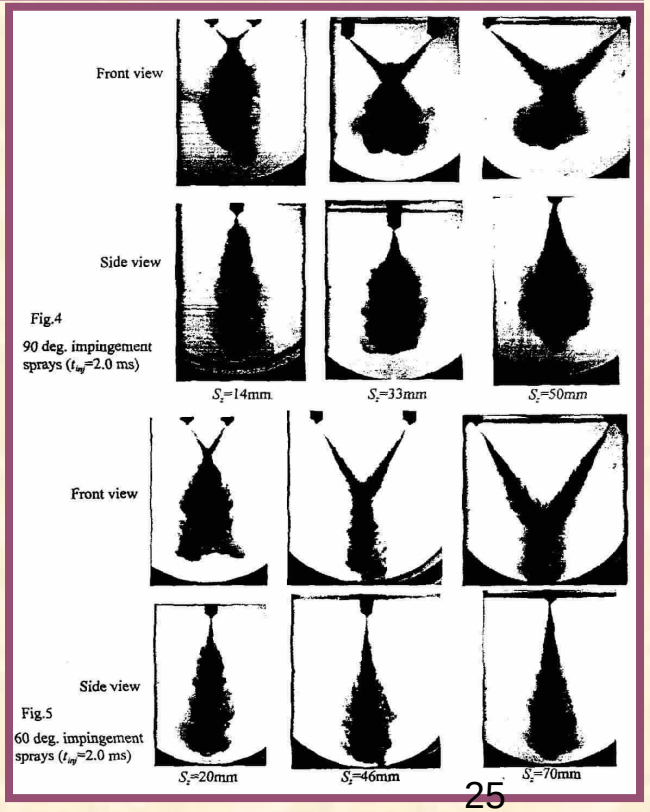

INTERACTING-SPRAYS INJECTION SYSTEM: Work by Others

Research work reported by others following the research conducted by Chehroudi et al.

Chehroudi's work predates all such applications in diesel engines

1999-01-0185

Trial of New Concept Diesel Combustion System - Premixed Compression-Ignited Combustion -

Yoshinori Iwabuchi, Kenji Kawai, Takeshi Shoji, and Yoshinaka Takeda
Mitsubishi Motors Corporation

	Conventional	PCI Combustion
Compression Ratio	18.5	12.0
Combustion Chamber	ϕ64 Deep dish	ϕ 110 Bowl type
Injection Nozzle	ϕ 0.21×5-157°	ϕ 0.21×5-80°
Injection Pressure	80MPa	←

Premixed compression-ignition (PCI)

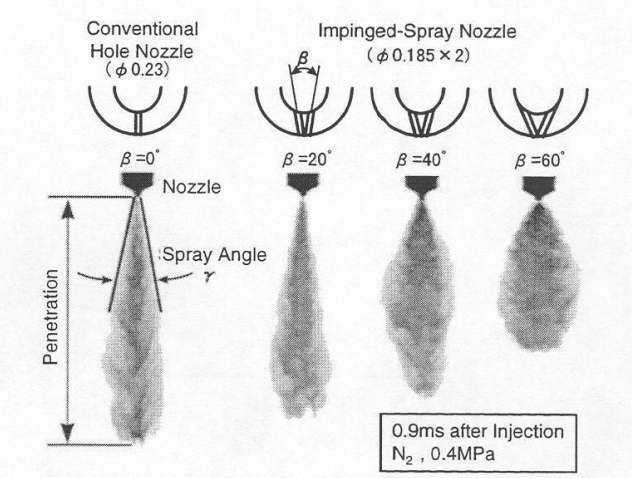

Figure 8. Spray Characteristics of Impinged-Spray Nozzle
(1 set of impinged holes)

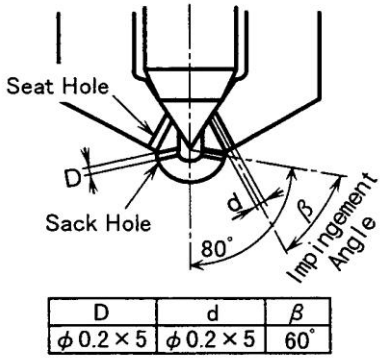

D	d	β
ϕ 0.2 × 5	ϕ 0.2 × 5	60°

Figure 12. Configuration of Impinged-Spray Nozzle with Engine Tests
(5 sets of impinged holes)

Spray Characteristics of Impinged-Spray Nozzle

To achieve a spray with not only low penetration and high dispersion, but also good atomization and a short injection period, it is necessary to maintain a high injection rate. With a view to creating a spray with these characteristics, the sprays formed with various spray-to-spray impingement angles were observed (Fig. 8). Nozzles which have one set of impinged holes and high pressure vessel were used for spray observation.

INTERACTING-SPRAYS INJECTION SYSTEM: Work by Others

Research work reported by others following the research conducted by Chehroudi et al.

Chehroudi's work predates all such applications in diesel engines

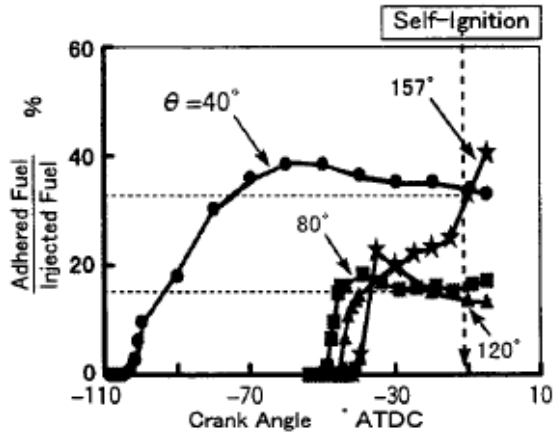

Figure 6. Calculated Amount of Fuel Adhering to the Wall

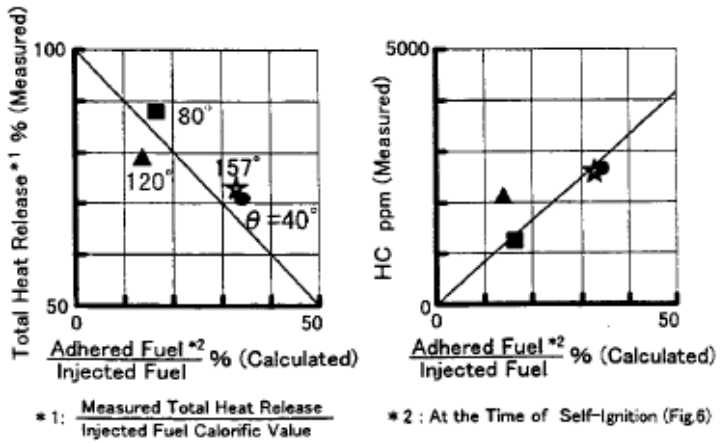

Figure 7. Relationship between Fuel Adhesion Amount and Total Heat Release, HC Emission

1999-01-0185

Trial of New Concept Diesel Combustion System - Premixed Compression-Ignited Combustion -

Yoshinori Iwabuchi, Kenji Kawai, Takeshi Shoji, and Yoshinaka Takeda
Mitsubishi Motors Corporation

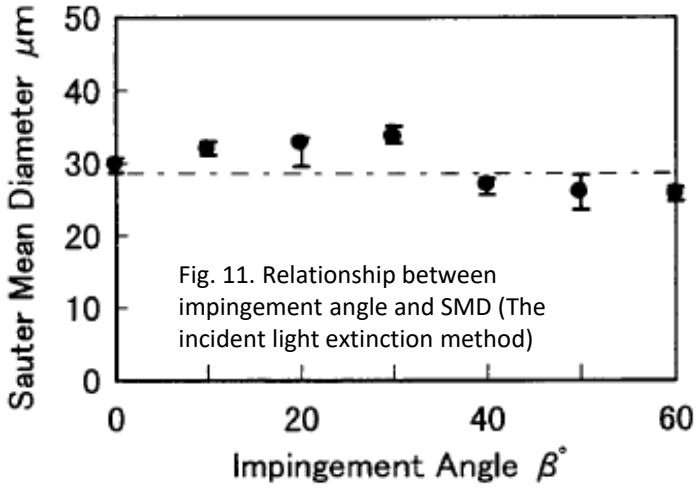

Fig. 11. Relationship between impingement angle and SMD (The incident light extinction method)

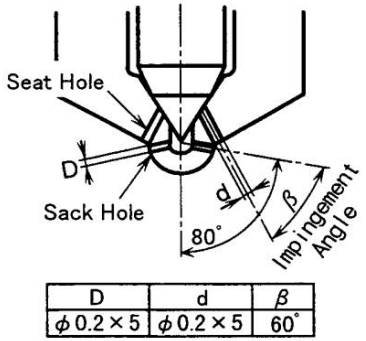

D	d	β
φ 0.2 × 5	φ 0.2 × 5	60°

Figure 12. Configuration of Impinged-Spray Nozzle with Engine Tests
(5 sets of impinged holes)

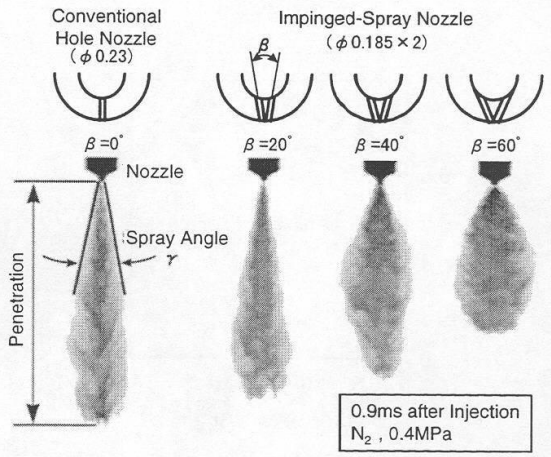

Figure 8. Spray Characteristics of Impinged-Spray Nozzle
(1 set of impinged holes)

INTERACTING-SPRAYS INJECTION SYSTEM: Work by Others

Research work reported by others following the research conducted by Chehroudi et al.

Chehroudi's work predates all such applications in diesel engines

1999-01-0185

Trial of New Concept Diesel Combustion System - Premixed Compression-Ignited Combustion -

Yoshinori Iwabuchi, Kenji Kawai, Takeshi Shoji, and Yoshinaka Takeda
Mitsubishi Motors Corporation

ABSTRACT

A premixed compression-ignited (PCI) combustion system, which realizes lean combustion with high efficiency and low emissions, was investigated and its effects and problems were ascertained. With PCI combustion, fuel was injected early on the compression stroke and a premixed lean mixture was formed over a long mixing period. The test engine was operated with self-ignition of this premixed lean mixture. From the results of combustion observation and numerical simulation, a need to prevent the fuel spray from adhering to the cylinder liner and combustion-chamber wall was identified. Consequently, an impinged-spray nozzle with low penetration was made and tested. As a result, an extremely low nitrogen-oxide (NOx) emission level was realized but fuel efficiency was detracted slightly. Also, the engine operating range possible with PCI combustion was found to be limited to partial-load conditions and PCI combustion was found to cause an increase in hydrocarbon (HC) emission. Since it offers ideal combustion characteristics with a high degree of constant volume of heat release, however, PCI combustion potentially represents a more efficient, cleaner combustion (ultra-low NOx and low smoke) than those of conventional diesel engines.

Premixed compression-ignition (PCI)

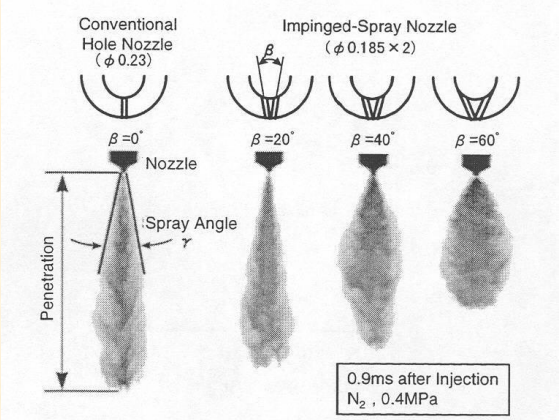

Figure 8. Spray Characteristics of Impinged-Spray Nozzle (1 set of impinged holes)

Premixed compression-ignition (PCI)

CONCLUSIONS

With regard to PCI combustion with early direct injection, combustion observation and numerical simulation were performed, improvements in spray characteristics were achieved, and tests were performed with a view to reducing fuel consumption, expanding the operating range, and reducing HC emission. The study yielded the following conclusions:

(1) When early direct injection is performed with a conventional hole nozzle, the spray's penetration is significant and fuel adheres to the combustion-chamber wall. NOx emission is reduced, but fuel consumption and HC emission increase. Thus, a spray with low penetration and wide dispersion is required.

(2) PCI combustion is a form of lean combustion that is not accompanied with a luminous flame, and it takes place throughout the combustion chamber.

(3) An impinged-spray nozzle realizes the low-penetration, high-dispersion, and high injection rate required with early direct injection, and it produces a spray that is suitable for PCI combustion.

(4) Compared with PCI combustion using a hole nozzle, PCI combustion using an impinged-spray nozzle offers significant reductions in fuel consumption and smoke emission, and it realizes combustion with ultra-low NOx and low smoke emissions. However, fuel consumption is slightly higher than that of conventional diesel combustion.

(5) Supercharging enables expansion of the operating range with PCI combustion possible.

(6) An oxidation catalyst can be used to reduce HC emission comparable with that of conventional diesel combustion. With low operating load, however, the effect of an oxidation catalyst is insufficient and another means of HC reduction is necessary.

Although PCI combustion realizes ultra-low NOx emission and low smoke emission, it is slightly inferior to conventional combustion in terms of fuel consumption. Provided some reliable means of controlling ignition is found and optimizing the compression ratio is carried out in terms of fuel consumption, the PCI combustion system potentially represents a new combustion system that is both clean and highly efficient.

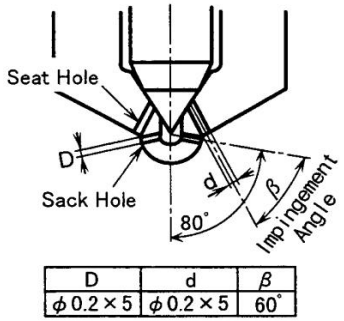

D	d	β
φ 0.2 × 5	φ 0.2 × 5	60°

Figure 12. Configuration of Impinged-Spray Nozzle with Engine Tests (5 sets of impinged holes)

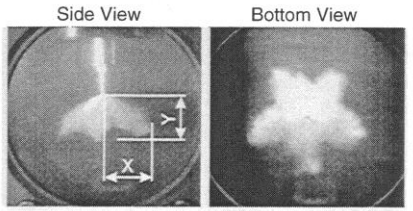

Figure 13. Fuel Spray Configuration of Impinged-Spray Nozzle (N_2 , 0.4MPa *1)

*1: Same atmospheric density as that in the cylinder at 50° BTDC in engine test

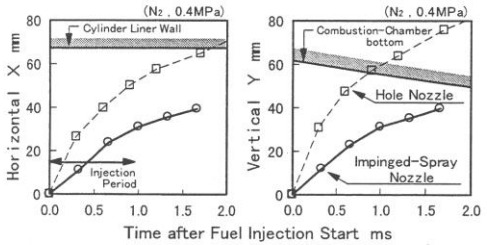

Figure 14. Penetration of Impinged-Spray Nozzle

B. Chehroudi, PhD

INTERACTING-SPRAYS INJECTION SYSTEM: Work by Others

Research work reported by others following the research conducted by Chehroudi et al.

Chehroudi's work predates all such applications in diesel engines

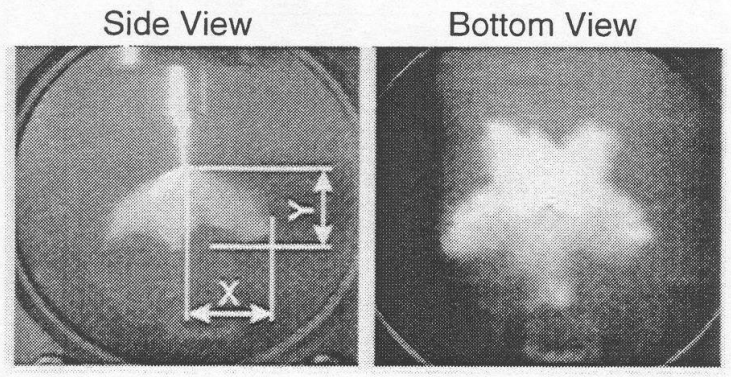

Figure 13. Fuel Spray Configuration of Impinged-Spray Nozzle (N_2 , 0.4MPa *1)

*1: Same atmospheric density as that in the cylinder at 50° BTDC in engine test

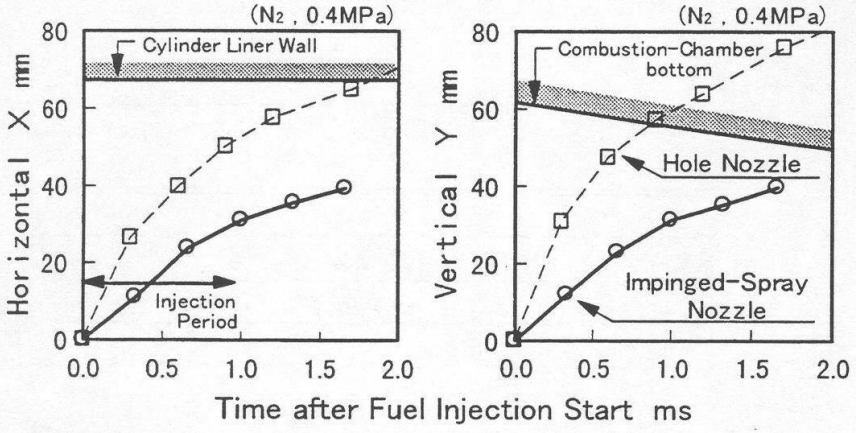

Figure 14. Penetration of Impinged-Spray Nozzle

1999-01-0185

Trial of New Concept Diesel Combustion System - Premixed Compression-Ignited Combustion -

Yoshinori Iwabuchi, Kenji Kawai, Takeshi Shoji, and Yoshinaka Takeda
Mitsubishi Motors Corporation

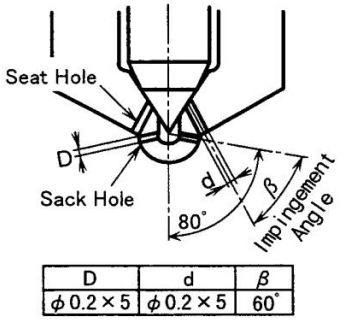

D	d	β
ϕ 0.2 × 5	ϕ 0.2 × 5	60°

Figure 12. Configuration of Impinged-Spray Nozzle with Engine Tests
(5 sets of impinged holes)

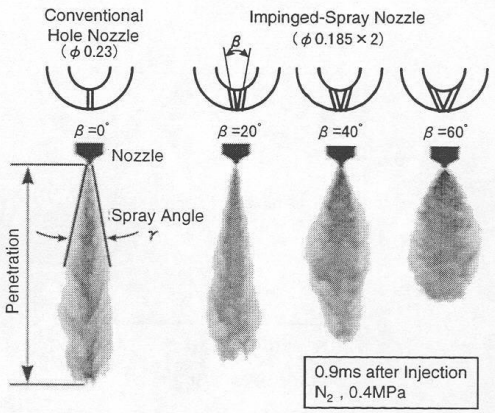

Figure 8. Spray Characteristics of Impinged-Spray Nozzle
(1 set of impinged holes)

Premixed compression-ignition (PCI)

CONCLUSIONS

With regard to PCI combustion with early direct injection, combustion observation and numerical simulation were performed, improvements in spray characteristics were achieved, and tests were performed with a view to reducing fuel consumption, expanding the operating range, and reducing HC emission. The study yielded the following conclusions:

(1) When early direct injection is performed with a conventional hole nozzle, the spray's penetration is significant and fuel adheres to the combustion-chamber wall. NOx emission is reduced, but fuel consumption and HC emission increase. Thus, a spray with low penetration and wide dispersion is required.

(2) PCI combustion is a form of lean combustion that is not accompanied with a luminous flame, and it takes place throughout the combustion chamber.

(3) An impinged-spray nozzle realizes the low-penetration, high-dispersion, and high injection rate required with early direct injection, and it produces a spray that is suitable for PCI combustion.

(4) Compared with PCI combustion using a hole nozzle, PCI combustion using an impinged-spray nozzle offers significant reductions in fuel consumption and smoke emission, and it realizes combustion with ultra-low NOx and low smoke emissions. However, fuel consumption is slightly higher than that of conventional diesel combustion.

(5) Supercharging enables expansion of the operating range with PCI combustion possible.

(6) An oxidation catalyst can be used to reduce HC emission comparable with that of conventional diesel combustion. With low operating load, however, the effect of an oxidation catalyst is insufficient and another means of HC reduction is necessary.

Although PCI combustion realizes ultra-low NOx emission and low smoke emission, it is slightly inferior to conventional combustion in terms of fuel consumption. Provided some reliable means of controlling ignition is found and optimizing the compression ratio is carried out in terms of fuel consumption, the PCI combustion system potentially represents a new combustion system that is both clean and highly efficient.

INTERACTING-SPRAYS INJECTION SYSTEM: Work by Others

Research work reported by others following the research conducted by Chehroudi et al.

Chehroudi's work predates all such applications in diesel engines

- Sponsored by SCANIA
- Used interacting or impinging sprays
- Early injection for HCCI
- Published in 2007

http://kth.diva-portal.org/smash/record.jsf?pid=diva2%3A11583&dswid=4134

https://pdfs.semanticscholar.org/ec64/31cc0e8c35e221b44344b3bfec3bf7ea7cf9.pdf

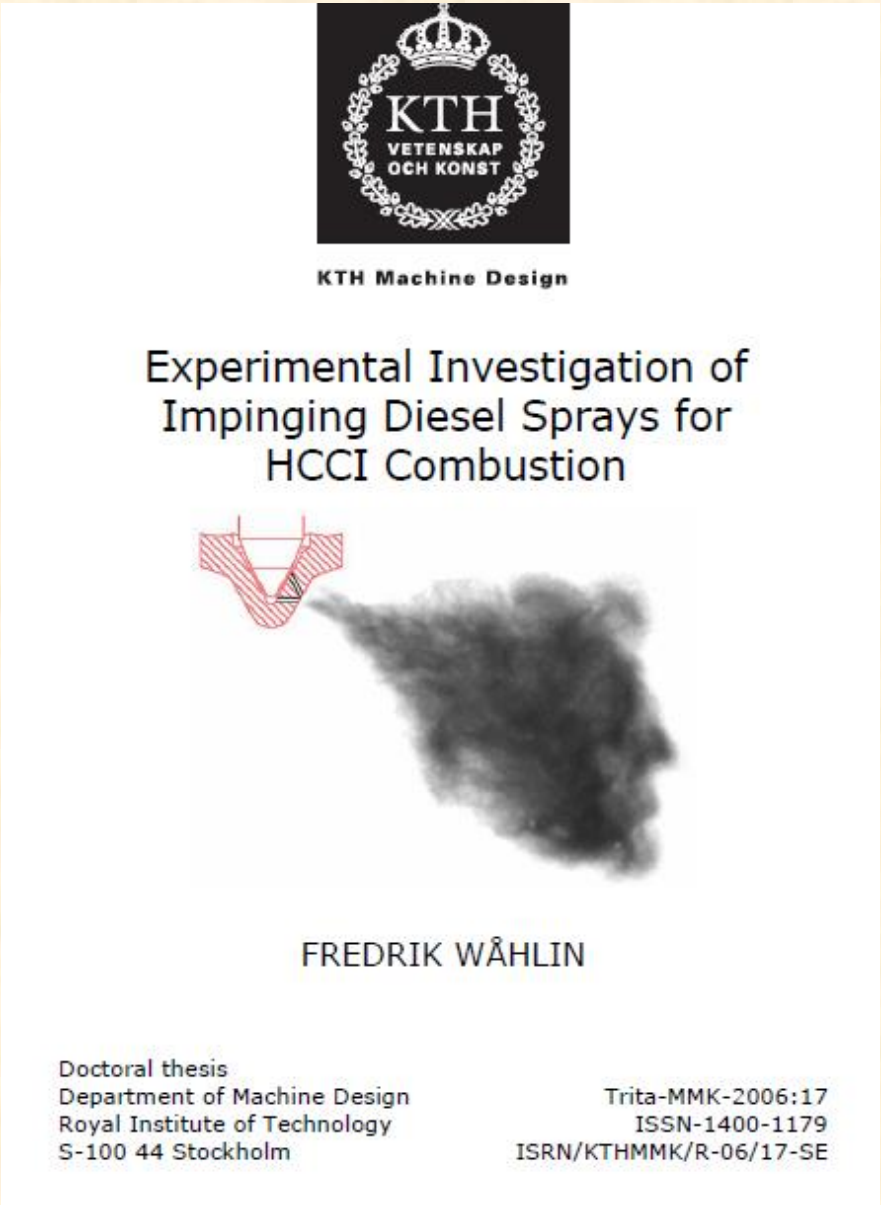

KTH Machine Design

Experimental Investigation of Impinging Diesel Sprays for HCCI Combustion

FREDRIK WÅHLIN

Doctoral thesis
Department of Machine Design
Royal Institute of Technology
S-100 44 Stockholm

Trita-MMK-2006:17
ISSN-1400-1179
ISRN/KTHMMK/R-06/17-SE

Extension of the Interacting-Sprays Injection Concept

Diesel-Fuel-Piloted Natural Gas Injector (Westport)

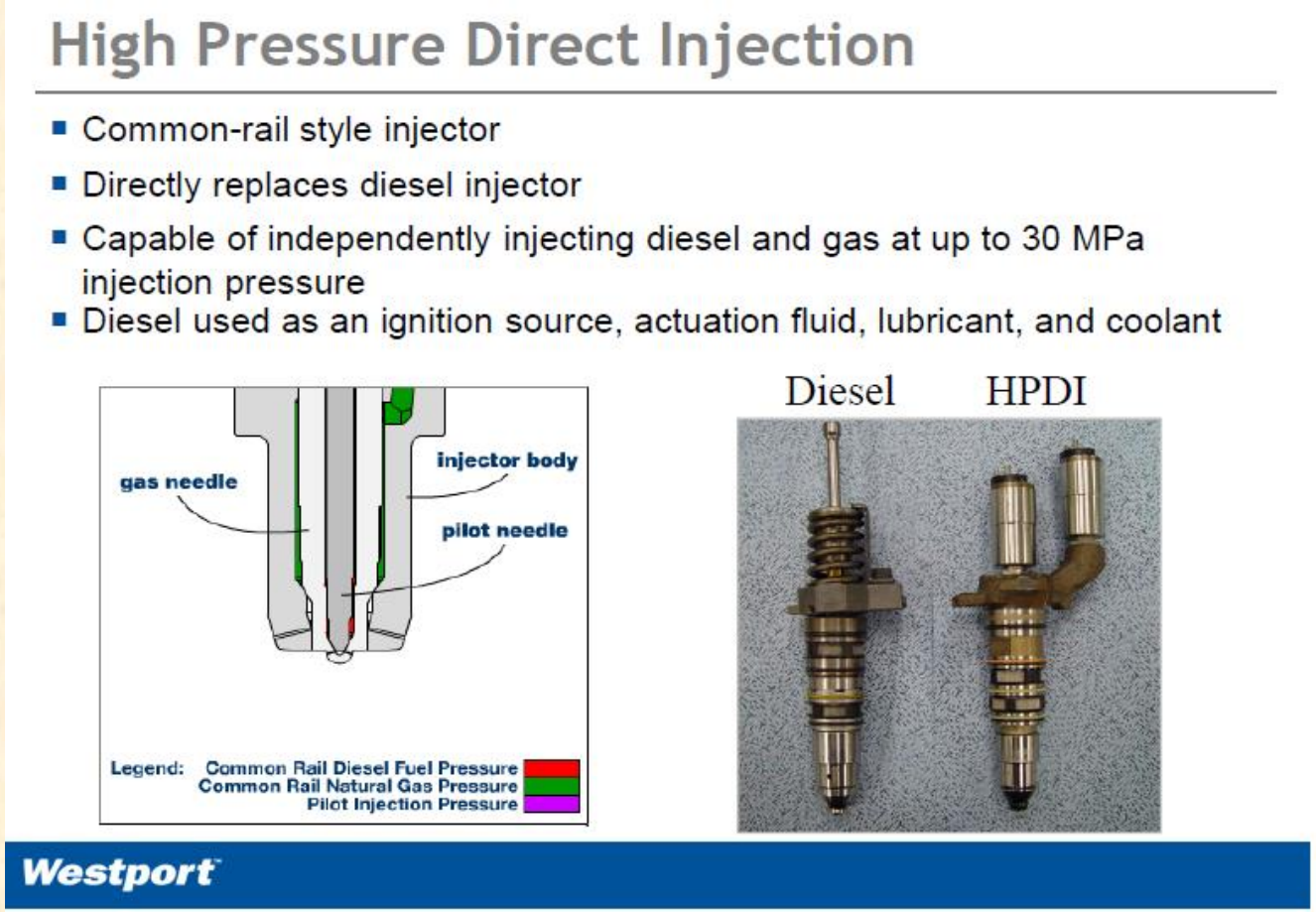

Dr. Chehroudi met Prof. Phillip Hill at the 1996 SAE Future Transportation Technology Conference & Exposition, Powerplants of the Future-SP-1187, held in Vancouver, B. C., Canada, where his Interacting-Sprays injection was presented.

INTERACTING-SPRAYS INJECTION SYSTEM

A Concept Brought from Liquid Rocket Injection to Diesel Engine
by
B. Chehroudi, PhD

Supercritical Rocket Like-Impinging Jets
Chehroudi et al.

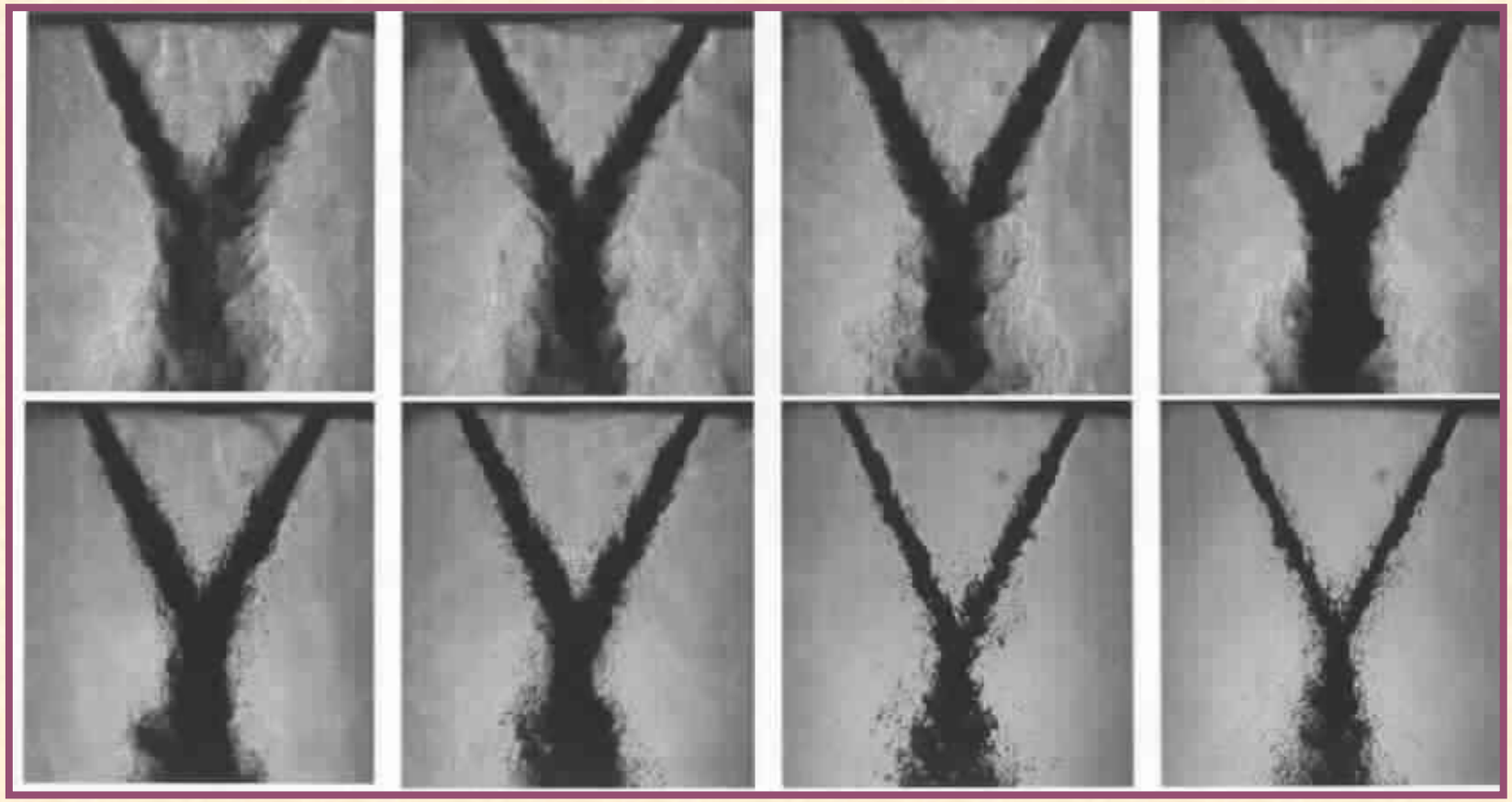

The End

An Original Fuel Injection Concept Brought From Liquid Rocket Engine to Diesel Engine
by
B. Chehroudi, PhD